ATLANTIS PRESS

Advances in Intelligent Systems Research, volume 166

7th Scientific Conference on Information Technologies for Intelligent Decision Making Support (ITIDS 2019)

Development of the Structure of the Upper-Limb Exoskeleton for Operator's Motion Capture With Master-Slave Control

Vyacheslav Petrenko
Academic department of Organization and Technology of Information Protection
North-Caucasus Federal University
Stavropol, Russia
vip.petrenko@gmail.com

Fariza Tebueva
Academic department of Applied Mathematics and Computer Security
North-Caucasus Federal University
Stavropol, Russia
fariza.teb@gmail.com

Mikhail Gurchinsky
Academic department of Applied Mathematics and Computer Security
North-Caucasus Federal University
Stavropol, Russia
gurcmikhail@yandex.ru

Sergey Ryabtsev
Academic department of Applied Mathematics and Computer Security
North-Caucasus Federal University
Stavropol, Russia
nalfartorn@yandex.ru

Olga Trofimuk
Academic department of Applied Mathematics and Computer Security
North-Caucasus Federal University
Stavropol, Russia
tro.lo.lo.lya@yandex.ru

***Abstract*—The study is devoted to the development of the structure of the upper-limb exoskeleton for operator's motion capture with master-slave control. The objective of the study is to develop design solutions in the field of registration of the current position of the operator's hand parts during the technological operations of the control commands formation for their accurate reproduction by the movements of the anthropomorphic manipulator links in real time. For the developed structure of the upper-limb exoskeleton, the division of the product scheme is described, the rationale for the design, the layout of kinematic pairs equipped with angular rotation sensors, and the design of the lever system that duplicates the operator's hand with its metric parameters is given. To check the efficiency of the exoskeleton design, a simulation program was used. The accuracy of the rotation angle of the exoskeleton elbow joint in the simulation model does not exceed 3.4%, shoulder joint – 5.2%. The presented structure of the exoskeleton will allow to register the current positions of the operator's hand parts when performing technological operations and to form control commands for their accurate reproduction by the links of the manipulator.**

Keywords–upper-limb exoskeleton, lever system, motion capture, master-slave control, mechanical design

I. INTRODUCTION

With the development of robotic systems, there is a great interest in the replacement of human labor in potentially dangerous areas of activity with their help. However, the level of robotics development currently does not allow the use of fully robotic means in view of the fact that modern robots do not have a sufficient level of autonomy and the ability to independently make complex decisions, especially in potentially aggressive environments and situations involving risk to humans. In this regard, the master-slave type of control is relevant, especially for the actuators of robot – manipulators.

Analysis of available publications on this subject showed that for the implementation of the master-slave type of manipulator control, special hardware systems are used that allow the capture of the operator's movements. A specialized glove is often used as such devices, for example, in [1] a hybrid system consisting of a touch 3-D-printed soft robotic grip and a soft fabric tactile glove is considered. In work [2] the design development of such device is presented, and in work [3] the method of master-slave control is described. The problems of capturing everyday objects are described in [4].

The use of gloves as a control device has a number of advantages, such as ease of use and small size. However, its use does not allow to determine the exact position of the operator's elbow, which is a significant disadvantage in tasks where the exact position of the operator's elbow is required, such as training in special movements and performing manipulations in a limited space with obstacles. Use of exoskeletons allows to eliminate this drawback, completely copying the kinematic scheme of the operator's hand.

In work [5] design mechanical design solutions on creation of an lower-limb exoskeleton for strengthening of loading are presented. Upper-limb exoskeleton are now widely used in medicine for the rehabilitation of patients [6]-[8] and the relief of physical effort [9].

The article [10] presents the design, modeling and implementation of a system that allows you to control a robotic arm using motion commands captured by an exoskeleton. In this work, the realization of the upper limb exoskeleton with an inclined and vertically movable shoulder joint is considered, but with only 5 degrees of freeness. The work [11] describes the mechanical design solutions of active exoskeletons of the upper limbs, shows the anatomy and movements of the upper limb used in the development of design solutions in this work.

In this article anthropomorphic manipulators with kinematic structure having 7 degrees of mobility are considered as an object of control. The prototype of anthropomorphic manipulator is described in [12]. The prototype of the control device is a master-slave manipulator

[13] and a master-slave device [14]. In this work, the upper limb exoskeleton is considered as the master device, the developed product is hereinafter referred as the exoskeleton.

To register positions and anthropomorphic manipulator control developed device uses the method of solving the kinematics problem [15]: direct kinematics problem through the representation of Denavit-Hartenberg to determine the Cartesian coordinates of the shoulder joint, anthropomorphic manipulator wrist and the operator's hand and the inverse problem of kinematics to determine the Cartesian coordinates of the anthropomorphic manipulator elbow. To solve the problem of dynamics, the article [16] describes a method of predicting the operator's hand movements to form the laws of motion of the anthropomorphic manipulator nodes.

In this paper we propose the exoskeletons of the upper limbs structure for the registration of the operator's movements in the master-slave control. For this structure, mechanical design solutions are described and justified, allowing to accurately reproduce the manipulator l inks movements in real time.

II. MECHANICAL DESIGN

A. Application field of the development

The developed solution on the principle of operation is a master-slave device type, which is designed to control analog and analog-digital machines. It will provide control of anthropomorphic robotic systems and perform manipulations with various objects.

With the help of an exoskeleton, we can solve problems:

- verification of methods for solving inverse problems of kinematics and dynamics;
- registration of the current position of the operator's hand in the performance of technological operations and the formation of control teams in real time.

The exoskeleton allows to perform the following functions under control of an anthropomorphic manipulator:

- development operator professional movements skills on the virtual 3D model due to accurate registration of relative movements of the human hand, when interacting with tools and external objects;
- fixation all of the operator movements for their objective analysis and correction;

achieving the most accurate simulation of real work environment by combining the functions of recording the motion of a human hand with the formation of external power load on the performed movement.

The field of application of the developed product – management of anthropomorphic manipulators, technological operations, professional fields of activity, robotics.

B. The structure of the product

The structure of the exoskeleton has been developed to solve the research problem:

1) a set of hinged attachment of the exoskeleton to the operator;

2) lever system, duplicating the operator's hand;

3) hardware registration system of the link lever system relative rotation;

4) perform calibration stand;

5) software package.

This structure is due to the fact that it is necessary to logically divide the device of the product into electrical and mechanical parts. The electrical part includes paragraph 3, and the mechanical – paragraphs 1, 2.4. In addition, the product requires specialized software. The authors of this article developed and registered a set of software modules for the proposed structure of the upper-limb exoskeleton [17]–[21]. The calibration stand is included in the complex, but it’s a separate product and don’t considered in this article. The division scheme of the developed exoskeleton is shown in Fig. 1.

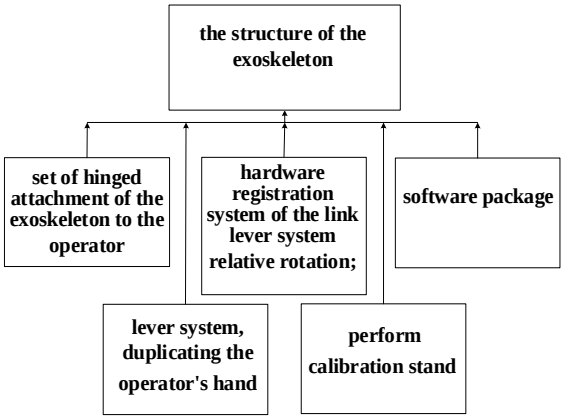

Fig. 1. Block division diagram of the exoskeleton.

Next, we consider in detail the description of the exoskeleton structural elements.

C. Description and justification of hardware complex design of relative turn registration of lever system links

The hardware registration complex of the relative rotation of the lever system links includes:

- angular position sensors installed to sensing the change in the angles of the links relative positions;
- permanent magnets of angular position sensors;
- control board for angular position sensors.

As a magnet for angular position sensors, a magnet for the 6x2, 5mm series AS5000 encoder is used. The Costume Rev 1.0 Board is used as a control board for angular position sensors. To register the angles, each hinge of the exoskeleton must be equipped with an angular position sensor, which is installed to read the change in the angles of the relative positions of the links. Angular position sensors are installed in the kinematic pairs shown in Fig. 2.

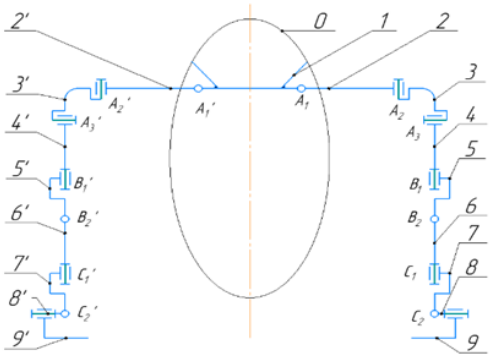

Fig. 2. Kinematic block diagram of the exoskeleton,

where 0 – the conditional image of the fastening of the exoskeleton elements to the operator torso, 1 – the fastening plate 2...9-links of the" left "exoskeleton module, 2'...9 ' – links of the right exoskeleton module, A1..C2-kinematic pairs of the "left" exoskeleton module, A1'...C2 '– kinematic pairs of the" right " exoskeleton module.

The design of the exoskeleton uses 14-bit angle sensors Austriamicrosystems AS5048A-HTSP. The angles of rotation corresponding to each kinematic pair are shown in table 1.

TABLE 1 – REALIZED ANGLES OF ROTATION IN THE HINGE

№	The name of the kinematic pair	The designation of the rotation angle	Implemented operator degree of mobility
1	A_1 / A_1’	0..90	Shoulder movement in the frontal plane
2	A_2 / A_2’	-20..90	Shoulder movement in the sagittal plane
3	A_3 / A_3’	0..90	Shoulder movement in the horizontal plane
4	B_1 / B_1’	0..110	A bend in the elbow joint of the operator
5	B_2 / B_2’	-90..45	Forearm rotation
6	C_1 / C_1’	-30..30	Wrist swing
7	C_2 / C_2’	-70..70	Wrist swing

To ensure the unification of the master device nodes, the location of the encoders in the hinges is the same type and is shown in Fig. 3. The board of the magnetic encoder 1 is fixed by two screws on the fixed link 4. The encoder magnet 2 is installed on the moving link 3, when moving the link 3 relative to the link 4, the encoder board reads the movement of the magnet poles and converts the circular displacement into a digital signal, which is transmitted for further processing to the exoskeleton electronics board.

Angular position sensors are installed in kinematic pairs. The joints of the exoskeleton equipped with angular position sensors are implemented in the design, as shown in the пeneral form in Fig. 3. Considered incisions hinges A. (hinges And’..C’) according to the kinematic scheme shown in Fig. 4.

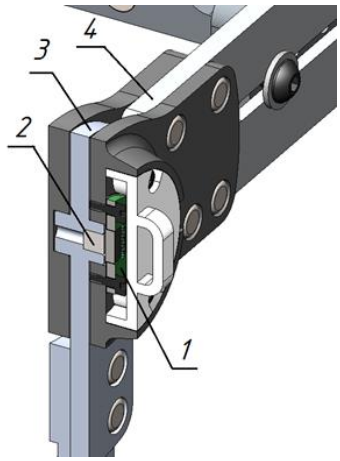

Fig. 3. Encoder location in the hinge of the exoskeleton,

where 1-magnetic encoder board, 2-encoder magnet, 3-movable link, 4-fixed link.

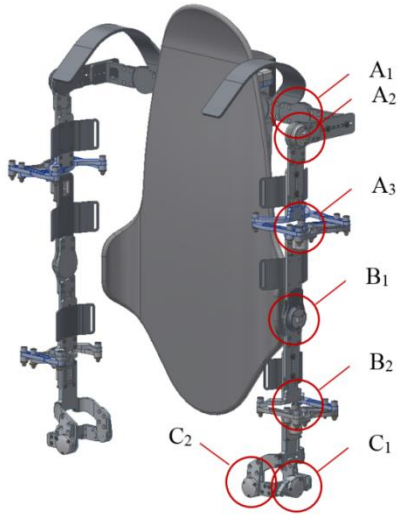

Fig. 4. Location of kinematic pairs equipped with angular rotation sensors (on the right side of the exoskeleton, kinematic pairs are arranged in inversed manner).

Angular position sensors in kinematic pairs A1, A2 and B1 are implemented as shown in Fig. 5.

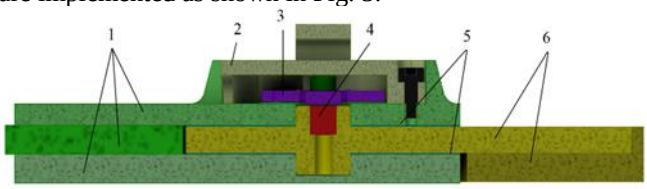

Fig. 5. Schematic study of kinematic pairs A1, A2 and B1,

where 5 – details of the i-th link 2 – sensor cover, 3 – electronic board of the sensor 4 – the permanent magnet sensor, 5 – spacer ring, 6 – details of link i+1. the i-th link and the I+1 link, depending on the choice of the kinematic pair, are denoted:

1) for the kinematic pair A1 1 and 2 respectively;

2) for the kinematic pair A2 2 and 3 respectively;

3) for the kinematic pair in 1 5 and 6 respectively.

Angular position sensors in kinematic pairs A3 and B2 are implemented as shown in Fig. 6.

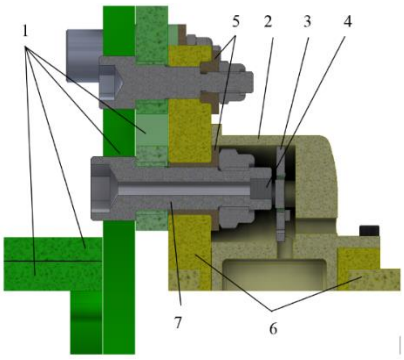

Fig. 6. Schematic study of kinematic pairs A3 and B2,

where 1 – parts of the i-th link, 2 – the sensor case, 3 – sensor electronic board 4 – the permanent magnet sensor, 5 – sliding bushing, 6 – details of link i+1, 7 – axis, made of a screw.

Slide bushing 6 are made of a polymer material with a low coefficient of friction for aluminum alloys. Slide bushing 6 perform the function of reducing the moment of friction between the parts of the links 4 and 6; 6 and 7.

Angular position sensors in kinematic pairs C1 and C2 are implemented, as shown in Fig. 7.

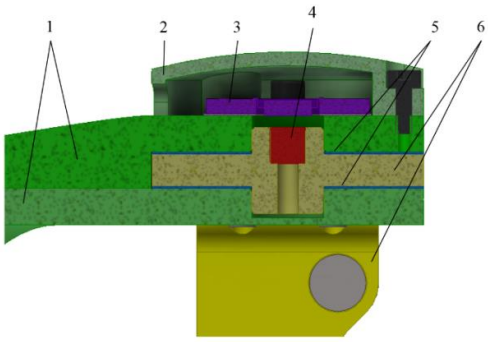

Fig. 7. Schematic study of kinematic pairs C1 and C2,

where 1 – parts of the link i, 2 – sensor cover, 3 – electronic Board of the sensor, 4– the permanent magnet sensor, 5 – spacer ring, 6 – details of link i+1.

D. Description of the hinged attachment kit for the operator

Fastening of the exoskeleton to the the operator body is carried out with pads, shoulder and forearm straps and velcro waist belt. The structure of the hinged attachment includes:

- belts on textile fasteners (velcro);
- metal staples;
- lugs;
- plastic fastening for fixing the wrist joint;
- flexible shell with eight polypropylene plates to fix the back and lumbar joint.

The overall dimensions of the belts are selected as follows. The length of the belt should allow the adjustment of the hinged attachment, based on anthropomorphic parameters of the operator, and perform a secure fit. The width of the belt should also firmly fix the fastening. The ends of the belt are sewn threads and processed in such a way as to avoid blooming and delamination. The seams made of a sewing machine stitch closed.

E Description and justification of the lever system design, duplicating the operator's hand

Lever mechanism is a structure of interconnected rotational and translational pairs of links.

The lever system provides rotation of the operator's shoulder and forearm. A feature of the construction lies in the fact that the rotation axis of the mechanism coincides with the rotation axis of the operator joints due to the made to the linkage system. The structure of the lever system includes 4 levers, 2 links. The input link is static, the output link is rotary. The lever mechanism is not equipped with external drives. Movement of the mechanism links are secured by natural human movements.

For reliable fixation of the exoskeleton on the operator and comfortable operation, it is necessary that the design has a number of adjustable parameters. To determine the change in the basic geometric parameters of the exoskeleton, we take a number of basic movements of the operator's hand: lifting the hand from the position along the torso in front of you to 180°, lifting the hands from the position along the torso to 180°, rotations of the operator's hand around the axis to 180°, a straight arm stretched along the torso. The linkage system in its movable joints must have large operating ranges. So the hinges connecting the moving parts of the lever system must have at least 160° operating range.

Based on the above, we take the following possible anthropometric indicators of the operator, under which the exoskeleton should fit (Fig. 12):

- waist – 66-139 cm;
- chest – 78-141 cm;
- arm length – 73,8-82,7 cm;
- body height – 52-58,2 cm;
- shoulder width – 36,8-45,5 cm.

The exoskeleton is designed in such a way that it is possible to change the basic length of the links, to shift the fasteners to fulfillment the anthropometric indicators shown in Fig. 8.

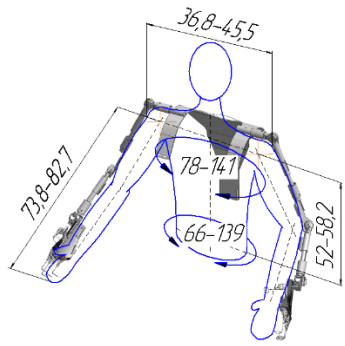

Fig. 8. Size control range of the lever system (cm).

The main anthropometric characteristics of a person are the justification for the choice of link lengths and their

necessary adjustments. Adopted core length units lever system, duplicating the hand of the operator, as shown in Fig. 9, the metric parameters of the Fig. – 10.

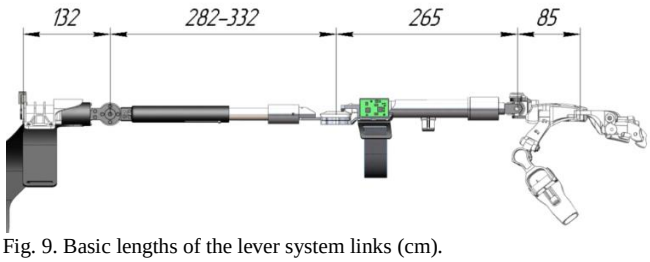

Fig. 9. Basic lengths of the lever system links (cm).

The lever system is designed for a person with a height of 175...185 cm, having a medium-sized physique. In the nodes of the shoulder and forearm there are places of adjustment for a more precise fit for the operator. Metric parameters of the lever system are shown in Fig. 10.

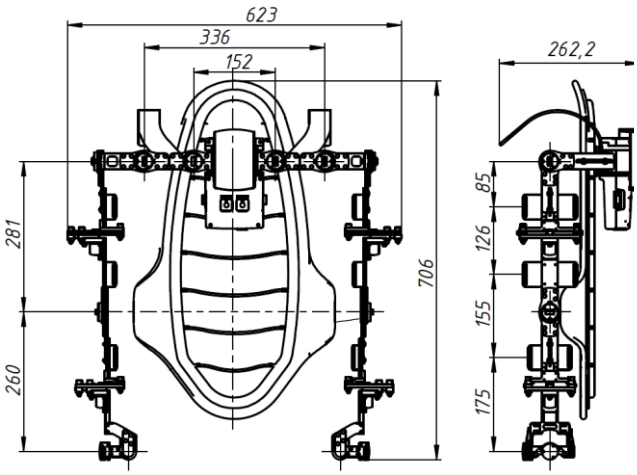

Fig. 10. Basic metric parameters of the exoskeleton (cm).

A General view of the developed exoskeleton is shown in Fig. 11.

Fig. 11. Physical form of the developed exoskeleton.

Lever system is a product consisting of 3 main parts connected to each other. Each of the 3 parts consists of parts made of aluminum and plastic plates. In the nodes, providing the fold, the rotation and rocking of the device installed encoders that monitor the corresponding movement of the operator.

III. RESULTS

The main results of this work are the mechanical design solutions for the creation of registration hardware components of the relative rotation angles of the exoskeleton complex links. And technical solutions for developing the component parts of the exoskeleton, which allows to realize accurate reproduction of the anthropomorphic manipulator links the operator movement.

A simulation program was developed to check the results. A simulation model of the exoskeleton in different positions is shown in Figure 12.

In the simulation model of the spatial position of the master device links, movements in the shoulder, elbow and wrist joints are implemented. In total, the model implemented 7 degrees of mobility: 3-in the shoulder, 2 – in the elbow and 2-in the wrist joint.

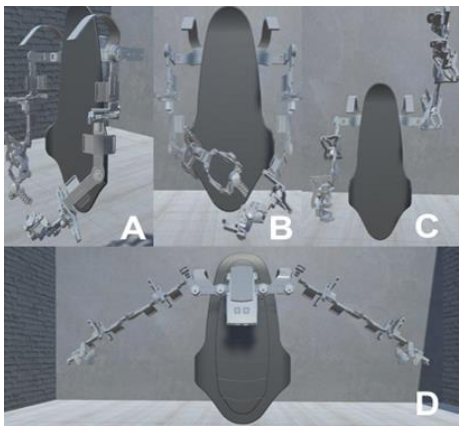

Fig. 12. Simulation model: A – side view, B – rotation in the elbow joint, C – movement in the shoulder joint, D – lifting in the shoulder joint.

When the operator's hand is moved in the put-on exoskeleton, in the appropriate direction, the movement of the simulation model links of the master device at a given angle occurs (Fig. 13).

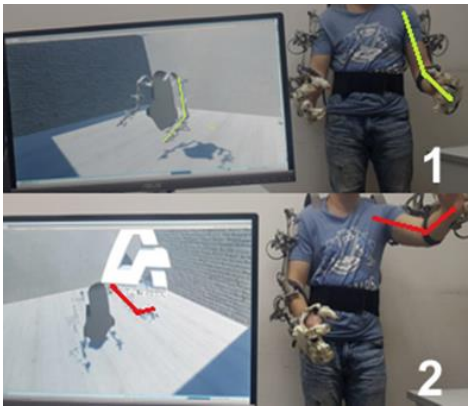

Fig. 13. Display of consistency between simulation model and operator actions.

The virtual angles of the model are limited to the specified values in the table, the values of the rotation angles of the lever system are given in table 1. The angles of rotation of the elbow and shoulder joints of the exoskeleton and the simulation model are shown in table 2.

TABLE 2. CORRESPONDENCE OF ROTATION ANGLES OF ELBOW AND SHOULDER JOINTS OF EXOSKELETON AND SIMULATION MODEL

№	Rotation angle of elbow joint		Inaccuracy		The rotation angle of the shoulder joint		Inaccuracy	
	Exoskeleton (deg.)	*Simulation model (deg.)*	*Absolute, (deg.)*	*Relative (%)*	*Exoskeleton (deg.)*	*Simulation model (deg.)*	*Absolute, (deg.)*	*Relative (%)*
1	10	10,17	0,17	1,7	5	5,26	0,26	5,2
2	15,4	15,64	0,24	1,56	10	10,26	0,26	2,6
3	20,1	20,79	0,69	3,4	15	15,37	0,37	2,47
4	25	24,92	0,06	0,24	20	20,56	0,56	2,8
5	30	30,19	0,19	0,63	25	25,74	0,74	2,96
6	45	45,46	0,46	1,02	30	31,53	1,53	5,1
7	90	89,39	0,61	0,68	45,1	45,76	0,66	1,46
8	-	-	-	-	90,1	89,99	0,11	0,12

The following results were obtained: the error of the rotation angles of the exoskeleton elbow joint and simulation model does not exceed 3.4%, shoulder and simulation model does not exceed – 5.2%.

IV. DISCUSSION

This article presents a master-slave device in the form of an exoskeleton. Design solutions are designed to record the current position of the operator's hand parts when performing technological operations.

Further work requires research to confirm the manufacturability and reliability of the design. It is advisable to conduct research in the development of mechanical parts and kinematic structure to capture the movements of the operator entire body, this direction includes: the synthesis of the complete kinematic structure and the development of mapping the degrees of human mobility on the degree of robot mobility. As well as the synthesis of a suitable structure of the complete exoskeleton, which will capture the movement of the operator in the required degrees of mobility.

V. CONCLUSION

In the article for the proposed structure of the upper-limb exoskeleton presents a description and justification of mechanical design solutions in the field of registration of the operator's hand current position in the performance of technological operations.

A kinematic block diagram is developed, a schematic implementation of the corresponding kinematic pairs and the location of angular rotation sensors in the nodes of the lever mechanism is performed. The design of the lever system, duplicating the operator's hand with its metric parameters and a set of hinged attachment to the operator, was developed.

The presented development allows to register the current positions of the operator's hand parts when performing technological operations and the formation of control commands for accurate reproduction of their movements by the manipulator links in real time. In further studies, full-scale tests on full-size anthropomorphic robots and manipulators are planned.

ACKNOWLEDGMENT

The research was carried out within the framework of the implementation of a research project on the development of a software and hardware control system based on solving the inverse problem of dynamics and kinematics within the framework of FCNIR 2014-2020 (unique identifier RFMEFI57517X0166) with the financial support of the Ministry of Science and Higher Education of the Russian Federation.

The authors would like to thank I. M. Kutlubaev who assisted in the experiments.

REFERENCES

[1] H. L. Ren et al., “Hybrid Tele-Manipulation System Using a Sensorized 3-D-Printed Soft Robotic Gripper and a Soft Fabric-Based Haptic Glove,” IEEE Robot. Autom. Lett., vol. 2, no. 2, pp. 880–887, 2017.

[2] P. Bharath Vamsi and V. Ragavendra Rao, “Design and fabrication of soft gripper using 3D printer,” IOP Conf. Ser. Mater. Sci. Eng., vol. 402, p. 012026, Sep. 2018.

[3] L. Huang, T. Kawamura, and H. Yamada, “Master-Slave Control Method with Force Feedback for Grasping Soft Objects using a Teleoperation Construction Robot,” Int. J. Fluid Power, vol. 13, no. 2, pp. 41–49, Jan. 2012.

[4] K. Matheus and A. M. Dollar, “Benchmarking grasping and manipulation: Properties of the Objects of Daily Living,” in 2010 IEEE/RSJ International Conference on Intelligent Robots and Systems, 2010, pp. 5020–5027.

[5] W. Kim, H. Lee, D. Kim, J. Han, and C. Han, “Mechanical design of the Hanyang Exoskeleton Assistive Robot(HEXAR),” in 2014 14th International Conference on Control, Automation and Systems (ICCAS 2014), 2014, pp. 479–484.

[6] W. Kim, H. Kim, D. Lim, H. Moon, and C. Han, “Design and Kinematic Analysis of the Hanyang Exoskeleton Assistive Robot (HEXAR) for Human Synchronized Motion,” 2017, pp. 275–279.

[7] B. Gao et al., “Embedded System-based a Portable Upper Limb Rehabilitation Robot,” in 2018 IEEE International Conference on Mechatronics and Automation (ICMA), 2018, pp. 631–636.

[8] D. Wang, Q. Meng, Q. Meng, X. Li, and H. Yu, “Design and Development of a Portable Exoskeleton for Hand Rehabilitation,” IEEE Trans. Neural Syst. Rehabil. Eng., vol. 26, no. 12, pp. 2376–2386, Dec. 2018.

[9] R. F. Natividad, S. W. Hong, T. M. Miller-Jackson, and C.-H. Yeow, “The Exosleeve: A Soft Robotic Exoskeleton for Assisting in Activities of Daily Living,” 2019, pp. 406–409.

[10] U. M. Morales, C. G. Mosquera, M. M. Sanchez, and H. W. Chamorro “Upper Limb Exoskeleton Design and Implementation to Control a Robotic Arm,” in 2017 International Conference on Information Systems and Computer Science (INCISCOS), 2017, pp. 73–78.

[11] R. Gopura, K. Kiguchi “Mechanical designs of active upper-limb exoskeleton robots: State-of-the-art and design difficulties,” in 2009 IEEE International Conference on Rehabilitation Robotics, 2009, pp. 178–187.

[12] A. A. Bogdanov, I. M. Kutlubaev, A. F. Permyakov, и V. B. Sychkov, “Anthropomorphic manipulator” RU 146 552 U1.

[13] A. A. Bogdanov,I. G. Jidenko, D. V. Kiyatkin, I. M. Kutlubaev, and A. F. Permyakov, “Master-slave manipulator,” RU 135 956 U1.

[14] A. P. Batrashkin, A. A. Bogdanov, M. R. Iksanov, I. M. Kutlubaev, and A. F. Permyakov, “Master device of master-slave manipulator,” RU 169 864 U1.

[15] F. B. Tebueva, V. I. Petrenko, V. O. Antonov, and M. M. Gurchinsky, “The Method for Determining the Relative Positions of the Operator’s Arm for Master-Slave Teleoperation of Anthropomorphic Manipulator,” Int. Rev. Mech. Eng., vol. 12, no. 8, p. 694, Aug. 2018.

[16] V. I. Petrenko, F. B. Tebueva, M. M. Gurchinsky, V. O. Antonov, and J. A. Shutova, “Solution of the dynamics inverse problem with the master-slave control of an anthropomorphic manipulator based on the predictive estimate of the operator’s hand movement using the updated Brown method,” IOP Conf. Ser. Mater. Sci. Eng., vol. 450, p. 042013, Nov. 2018.

[17] V.I. Petrenko, F.B. Tebueva, V.O. Antonov, M. M. Gurchinsky, and E. N. Laskina, “Software complex for visualization of the trajectory of anthropomorphic three-link manipulator in the space with an obstacle.” : cert. 2018617979 Russian Federation. Certificate of

official registration of the program for computer, applicant and copyright holder NCFU (RU). – № 2018615094; appl. 21.05.2018; publ. 05.07.2018, Register of programs for computer., p. 1, 2018.

[18] V.I. Petrenko, F.B. Tebueva, V.O. Antonov, and M. M. Gurchinsky, “Program for the solution of inverse problems of dynamics based estimates of the operator hand movement.” cert. 2018666426 Russian Federation. Certificate of official registration of the program for computer, applicant and copyright holder NCFU (RU). – № 2018663795; appl. 04.12.2018; publ. 17.12.2018, Register of programs for computer., p. 1, 2018.

[19] V.I. Petrenko, F.B. Tebueva, V.O. Antonov, M. M. Gurchinsky, and D. E. Pizhevsky, “The program for calculating the optimal value of the generalized coordinates of the anthropomorphic manipulator according to the criterion of energy consumption, to move the effector to a given point.” : cert. 2018617980 Russian Federation. Certificate of official registration of the program for computer, applicant and copyright holder NCFU (RU). – № 2018615092; appl. 21.05.2018; publ. 05.07.2018, Register of programs for computer., p. 1, 2018.

[20] V.I. Petrenko, F.B. Tebueva, V.O. Antonov, M. M. Gurchinsky, and A. S. Pavlov, “The program for calculating the angles of rotation of the operator's hand based on the generalized coordinates of the master-slave device in real time.” : cert. 2018619861 Russian Federation. Certificate of official registration of the program for computer, applicant and copyright holder NCFU (RU). – № 2018617423; appl. 16.07.2018; publ. 14.08.2018, Register of programs for computer., p. 1, 2018.

[21] V.I. Petrenko, F.B. Tebueva, V.O. Antonov, and M. M. Gurchinsky, “Trajectory planning program of three-link anthropomorphic manipulator based on interactive piecewise linear approximation.” :cert. 2018617978 Russian Federation. Certificate of official registration of the program for computer, applicant and copyright holder NCFU (RU). – № 2018663795; appl. 04.12.2018; publ. 17.12.2018, Register of programs for computer., p. 1, 2018.