Localizable Mobile Payment Shopping Cart based on Location Fingerprint Algorithm

Shulin Zhao [a], Siyu Li [b], Xi Yang [c], Xinyang Wu [d], Chuantian Tang [e]

Chengdu University of Technology, Chengdu 610000, China.

[a]1224066830@qq.com, [b]945514886@qq.com, [c]1085013644@qq.com,

[d]623227664@qq.com, [e]1392938946@qq.com

Abstract. The intelligent shopping cart is designed with embedded system, and has small area positioning and navigation, mobile payment, area storage and anti-theft functions. The Android system obtains the Wi-Fi signal strength and MAC address of AP, and sends the RSSI data to the server. The server obtains the coordinates through the location fingerprint database positioning algorithm. Meanwhile, the server can realize the navigation through the global shortest path planning by Floyd algorithm to facilitate customers to find the goods as soon as possible. The shopping cart realizes payment liberalization by setting up a small electronic cash register system. The new shopping cart system is equipped with two weighing boards, which allow customers to weigh bulk goods directly. Zonal storage is intended to protect fragile and frozen goods and reduce losses. The intelligent shopping cart system makes shopping time - saving and labor - saving, more convenient and faster.

Keywords: positioning and navigation; Mobile payment; Location fingerprint location algorithm; Partition storage.

1. Introduction

There are often long lines for settlement and payment in existing large supermarkets, especially in the peak checkout period of promotional activities or holidays. Some customers even give up the goods and leave directly, which brings great loss to the supermarket.

Currently, the functions of smart shopping cart are relatively scarce, and there are only a few cases of similar products with incomplete functions, which are not widely used. For example, the smart cart of Media Cart launched by Microsoft adopts RFID technology in indoor positioning technology [1], which is not easy to be integrated into mobile devices due to its short positioning distance. "Xi he" system makes comprehensive use of Beidou navigation system and indoor positioning system [2] to achieve accurate indoor and outdoor navigation, but it needs a long time to realize the coverage and use of large areas. Ultrasonic and infrared positioning system [3] is greatly affected by the environment and is not suitable for supermarkets with complex environment. Bluetooth location [4] is a short-distance and low-power wireless transmission technology, which is mainly used in small range location, single-floor hall or warehouse environment.

The smart shopping cart adopts Wi-Fi positioning technology based on the location fingerprint algorithm [5], which has high positioning accuracy and is applicable to the complex environment of supermarkets with low power consumption and low cost. After the selection of goods, the smart shopping cart provides self-checkout function for customers without waiting in line, and provides a more comfortable and free shopping environment for shoppers. The humanized shopping cart main body is changed to the partition storage mode to reduce the damage of goods in the process of shopping. The anti-theft function supervises the free shopping to reduce the loss brought to the merchants by the omission and mistake of brushing. The smart new shopping cart integrates positioning and navigation, mobile payment, partition storage and anti-theft functions, reduces the input of supermarket service personnel, and makes shopping more convenient.

2. Positioning and Navigation and its Algorithm

2.1 Positioning and Navigation

The positioning and navigation system consist of three parts: multiple AP nodes (wireless routers), mobile terminals configured with Android system and servers built by Ubuntu+MySql+JSP+Tomcat. The open source SDK toolkit in Android development is used to provide the Wi-Fi Manager class library. The start Scan and get Scan Results methods in the class library are used to obtain the Wi-Fi signal strength and MAC address of each AP, and then the signal strength sequence of each AP is combined into an ordered vector according to the MAC address of AP. We Carry an APP on the terminal, the APP sends the RSSI data received from multiple AP nodes to the server, the server calculates the positioning coordinates by using the location fingerprint database positioning algorithm for these data, and then returns the coordinates to the mobile terminal, which receives and displays this information on the APP navigation page. After the user enters the destination, the server plans the optimal route and navigation for the user through the global path planning Floyd algorithm [6].

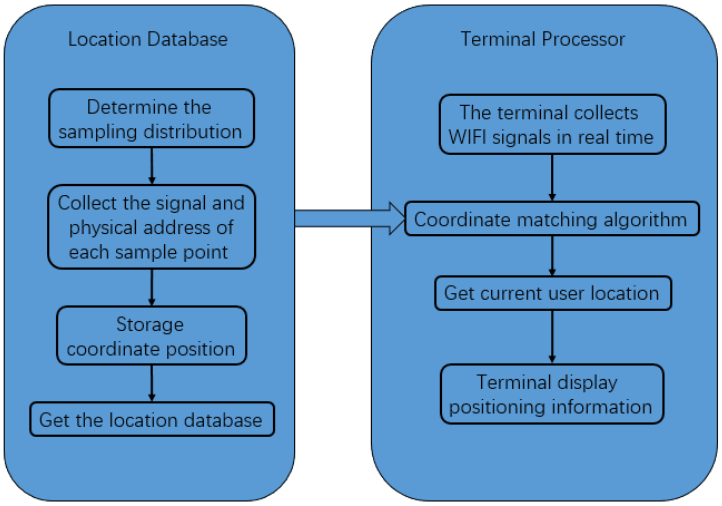

Fig. 1 Block diagram of fingerprint location algorithm

2.2 Implementation of Positioning Algorithm

Location based fingerprint [7] Wi-Fi indoor positioning technology using Wi-Fi received signal strength and the position of the reference mapping relationship to estimate the location of the user, reception facilities nearer the distance signal source, the strength of the received signal strength, receiving equipment the farther the distance signal source, the received signal strength is weak, so it can be in different positions have different Wi-Fi RSSI information [8], the localization algorithm is divided into two stages: offline data acquisition, online orientation phase. In the offline data acquisition stage, the receiving signal strength samples of multiple aps are collected at the preset reference points, and then stored in the database together with the location information, which is the location fingerprint database. At the online positioning stage, the client can collect real-time AP signal strength information, upload it to the positioning server, and use the k-nearest neighbor (KNN) algorithm [9] to match the similarity between the RSSI signal strength measured at the location point and the fingerprint points stored in the fingerprint database to estimate the location of the location point. The basic step of KNN algorithm is to receive the RSSI data of the point to be measured, represent the RSSI data corresponding to the sample with matrix formula, and then calculate the Manhattan distance between the point to be measured and each sample point in turn. The Manhattan distance calculation formula is

$$\mathrm{D} = \sqrt{\sum_{i=1}^{m} |S_i - R_{ni}|}$$

n is the sample point number, m represents the number of AP received, S_i represents the RSSI data of the ith AP received by the point to be measured, and R_{ni} represents the RSSI data of the ith AP received by the sample point n. The Manhattan distance is sorted and the first K sets of data with the smallest distance are selected. The coordinates of the points to be measured are the average values of the coordinates of the K sample points.

3. Intelligent and Humanized

3.1 Mobile Payment

Our smart shopping cart has the functions of mobile payment, partition storage and anti-theft in the aspect of intelligence and humanity. Among the mobile payment functions, we will install a small smart cash register system on each smart shopping vehicle to realize instant and fast mobile payment. Customers will be required for goods into the shopping cart, click checkout, the shopping cart automatically open scanner customers will want to buy goods in turn out and scan, check the purchase information above puts mobile payment barcode scanner to complete the payment, will not pay the goods back into the recovery area. This function is time-saving and convenient, which solves the problem of slow queuing in traditional supermarkets. If the payment process is missed or stolen, the scanning payment will not be completed smoothly, and the system will give corresponding prompts until the final payment is completed. We mainly use passive code scanning in mobile payment, that is, the buyer presents the payment code of the third-party payment platform to the merchant to scan the code. The intelligent cash register system provides both cash register and graphic report of commodity sales of each store for physical stores. According to the actual operation status of the store, it helps the store owner to reasonably allocate the stock quantity, reduce the stock pressure, and provide the simplest stock management for physical stores. The main process of the mobile payment system is as follows:

(1) The user initiates a payment request to the third-party payment platform after purchasing a good product;

(2) The third-party payment platform receives the payment request of the user, checks the payment information of the user, and initiates a request for deduction to the account system;

(3) The account system receives the request for deduction and authenticates the account information. After the authentication, the transfer and payment are completed and the confirmation information of deduction is sent to the third-party payment platform;

(4) The third-party payment platform notifies users of the payment result;

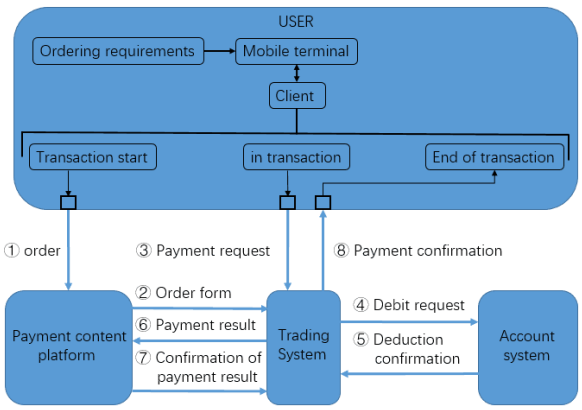

Fig. 2 Mobile payment block diagram

3.2 Partition Storage

The shopping cart is divided into three areas as a whole, such as fragile goods area, cold storage area and general goods area. Foam spacer is added in the fragile goods area to separate from other goods to prevent glass products, porcelain products and other fragile goods from collision or extrusion.

To increase the degree of heat preservation, an outer metal film and a copper - plated incubator are added to the cold storage area. The common goods area uses the traditional shopping cart carrying method to facilitate the use.

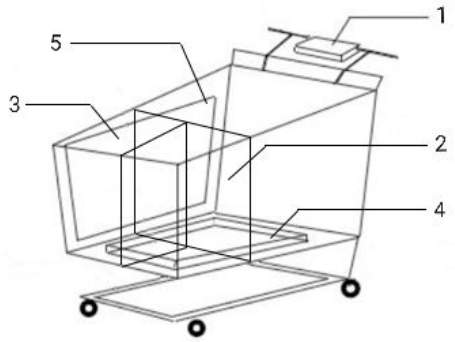

Fig. 3 Shopping cart structure (1: mobile terminal 2: heat preservation area 3: fragile goods area 4: bottom weighing table 5: side weighing table)

3.3 Security

The function of anti-brush or theft is mainly realized by the weight difference between the shopping cart and the weighing platform. If the reduced weight in the shopping cart is not equal to the increased weight of the weighing platform, the system will prompt to scan the product information again. If the product is not scanned again, the next product cannot be scanned. If picked up two items at the same time, the system will be reduced according to the shopping cart and the weight of the weighing machine to increase the weight of the specifications of the commodity information recorded in the database and system equivalence or not judge whether to pick up the goods are all scans. "Commodity - weight" corresponding before and after double detection and electronic receipt monitoring means are added to effectively solve the main problems such as the theft of supermarket goods.

4. Conclusion

This intelligent shopping cart integrates positioning and navigation, mobile payment, partition storage and anti-theft functions to improve the efficiency of the supermarket shopping and reduce the input of more human and material resources. According to the results of the questionnaire survey, people are looking forward to the application of the intelligent shopping cart for the supermarket shopping, which has a rather broad prospect of use. We will improve the research and development rate and improve the functions of the intelligent shopping cart, so that a complete intelligent shopping cart system can bring comfortable and free shopping experience for merchants and customers as soon as possible.

References

[1]. He X, Ye D, Peng L, et al. An RFID Indoor Positioning Algorithm Based on Bayesian Probability and K-Nearest Neighbor[J]. Sensors, 2017, 17(8):1806.

[2]. Chao M, Wang J, Chen J. Beidou compatible indoor positioning system architecture design and research on geometry of pseudolite[C]// 2016 Fourth International Conference on Ubiquitous Positioning, Indoor Navigation and Location Based Services (UPINLBS). 2017.

[3]. Jun W U, Zhi-Jing Y U, Jing-Chang Z, et al. Indoor positioning by using scanning infrared laser and ultrasonic technology[J]. Optics & Precision Engineering, 2016, 24(10):2417-2423.

[4]. Dickinson P, Cielniak G, Szymanezyk O, et al. Indoor positioning of shoppers using a network of Bluetooth Low Energy beacons[C]// International Conference on Indoor Positioning & Indoor Navigation. 2016.

[5]. Ge X, Qu Z. Optimization WIFI indoor positioning KNN algorithm location-based fingerprint[C]// IEEE International Conference on Software Engineering & Service Science. 2017.

[6]. Dachuan Wei. An Optimized Floyd Algorithm for the Shortest Path Problem[J]. Journal of Networks,2010,5(12), p.1496-1504.

[7]. Nowicki, Michał, Wietrzykowski J. Low-effort place recognition with WiFi fingerprints using deep learning[J]. 2016.

[8]. Park D W, Park J G. An Enhanced Ranging Scheme Using WiFi RSSI Measurements for Ubiquitous Location[C], First Acis/ jnu International Conference on Computers. IEEE, 2011.

[9]. Mejdoub, Mahmoud, Amar B, et al. Classification improvement of local feature vectors over the KNN; algorithm[J]. Multimedia Tools & Applications, 2013, 64(1), p.197-218.

[10]. Galvan B M. Cash – What's That? [J]. China Remembers Mandela, 2017(9), p.19.

[11]. Ji G, Harr B. An ecosystem view on third party mobile payment providers: a case study of Alipay wallet[J]. Info.