ATLANTIS PRESS
Advances in Intelligent Systems Research, volume 168
International Conference on Modeling, Analysis, Simulation Technologies and Applications (MASTA 2019)

Design of Filling Production Line Based on S7—300 Drug Classification

Li-na LIU[1], Peng-huai DUAN[2], Wei SHEN[1], Ke-nan LI[2] and Jun JI[2]
[1]Jinan Vocationl College, Jinan 271000, China
[2]Beijing Polytechnic, Beijing 100176, China

Keywords: Automatic control, PLC, Touch screen.

Abstract. Through the application of S7-300, HIM touch screen, DP/AS-i, ET200M, configuration programming, and screen design through the control of the production line, the sensor counts the empty bottle, the full bottle, whether the raw materials are sufficient, and whether the processing is sufficient Qualified, tested and calculated the pass rate and reject rate. The recipe can be selected via the HIM touch screen and the device can be monitored and controlled in real time. And there is a problem with real-time alarms.

Introduction

Nowadays, high-speed filling technology provides the best solution for many pharmaceutical companies, which not only meets the growth rate and safety of products, but also reduces the cost of packaging materials and operating costs of pharmaceutical companies[1]. With the maturity of the filling system technology, it will provide more advanced, stable and reliable pharmaceutical filling equipment for more domestic large and medium-sized pharmaceutical manufacturers, which will bring more direct cost benefits[2]. The filling system is mainly a small class of products in the packaging machine.

Signal transmission to the PLC and touch screen via an external sensor, signal is sent to the PLC, calculated and logically controlled, displayed on the HMI touch screen and controlled by the conveyor, as well as the start and stop control of other originals. And enable the conveyor to be controlled off-site. PLC: Programming with S7-300 is mainly to use the main program to control motor operation through external analog sensors, counting the number of cans, and monitoring the filling materials. The subroutine calculates the alarm for the yield and the reject rate and the reject rate comparator. ET200M: Controls the conveyor belt off-site and receives analog signal input. DP/AS-i: Controls the input and output of the analog analog[3]. HIM touch screen: Controls motor operation and monitoring with multiple interfaces, accepts signal reception and display of master station and slave station, recipe selection, receiving alarm signals, and raw material monitoring and adding raw materials.

Hardware Configuration and Network Establishment

The configuration hardware is an important function of the STEP7 software. It is to set and modify the parameters of the PLC hardware module. The configuration hardware consists of two parts, the configuration hardware module and the setup parameters. parameters[4].

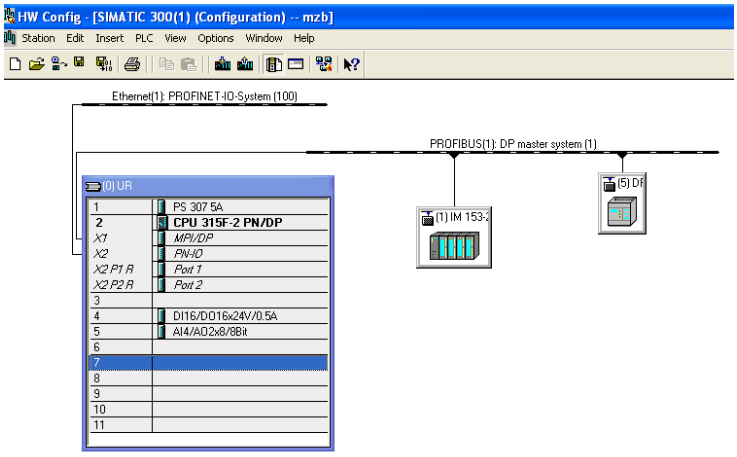

Figure 1. Hardware download

Control Program Writing

Main program: Control conveyor operation
Subroutine: Calculate the number of full bottles, empty bottles, and scrap rate; calculate the scrap rate by calculating the number of full bottles and empty bottles: when the scrap rate exceeds 10%, the indicator light alarm: and compare the raw material level When the warning value is reached, the indicator light alarms. Figure 2 is a partial program.

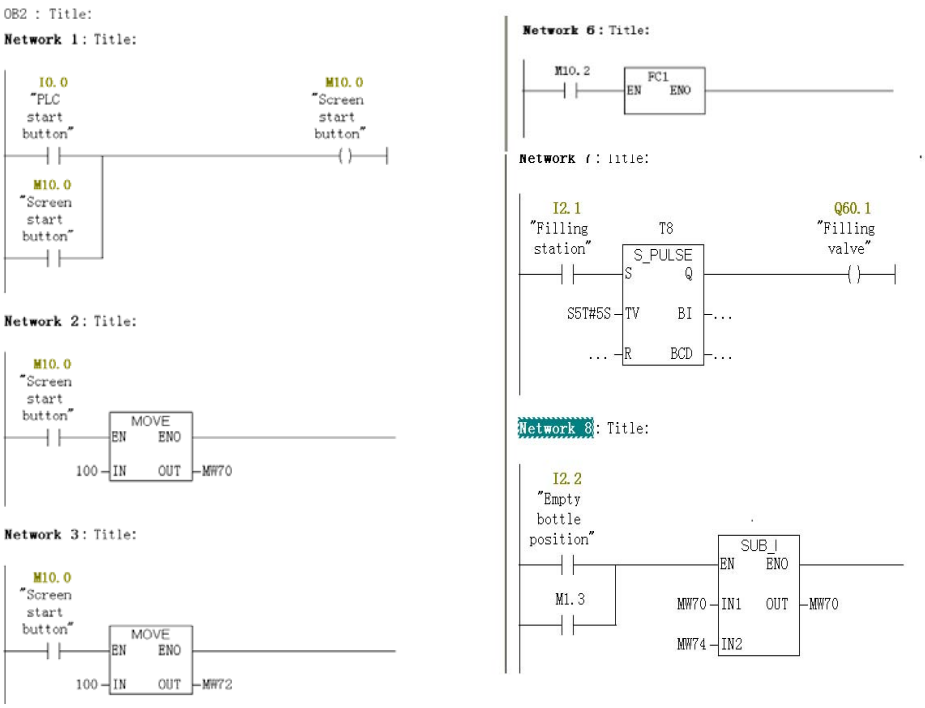

Figure 2. Program

Monitoring Module Design

Building A Network

First of all, we must establish the contact between the touch screen and the PLC, click on the link, find the touch screen address and PLC address input, and the network selects the Ethernet connection. Figure 3 shows the network.

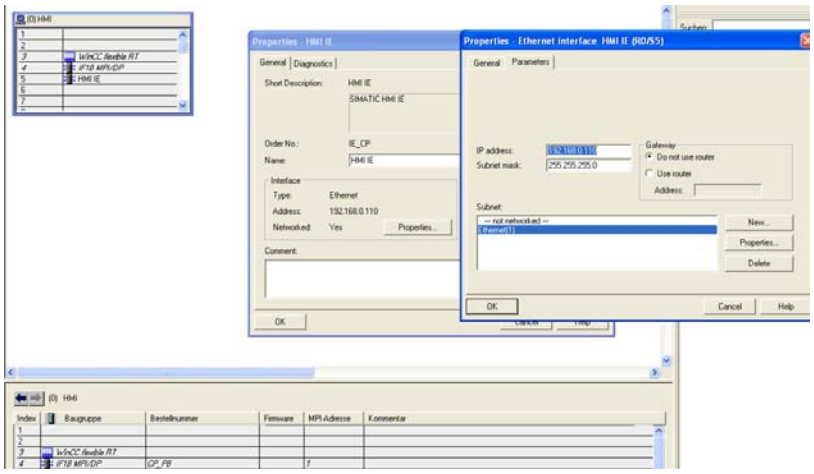

Figure 3. Building a network

Screen Design

Press the start button on the running status interface, the motor starts running, the conveyor runs, and when the empty bottle reaches the empty bottle sensor, the PLC counts. When the filling sensor is reached, the conveyor stops and the filling starts. Filling is complete. The conveyor runs and when the full bottle sensor is reached, the full number of bottles is obtained. Figure 4 shows the running simulation interface.

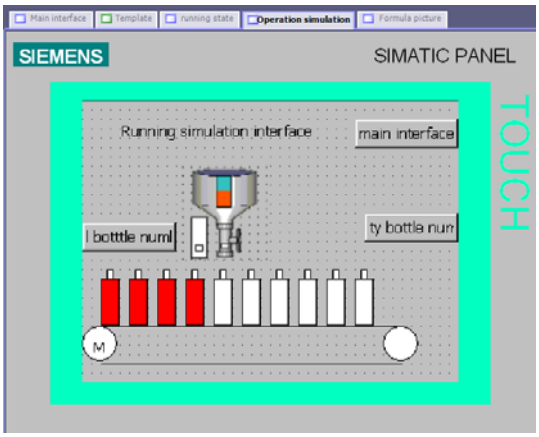

Figure 4. Running simulation interface

When the start button is pressed, the motor starts running and the conveyor runs. When the empty bottle reaches the empty bottle sensor, the PLC counts. When the filling sensor is reached, the conveyor stops and the filling starts. Filling is complete. The conveyor runs and when the full bottle sensor is reached, the full number of bottles is obtained[5]. Calculating the scrap rate shows data feedback. When the scrap rate reaches 10%, the reject rate indicator lights up. Figure 5 shows the operational status interface.

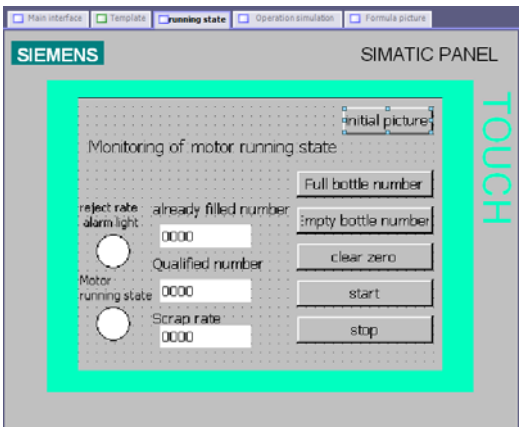

Figure 5. Running status interface

Conclusion

This design mainly uses PLC to control the sensor to monitor the efficiency of materials and qualified products, so that PLC can communicate with ET200M and DP/ASI to realize remote control and give alarm in time, then transfer the bottle to be filled to the filling machine to improve production efficiency[6].

References

[1] Li Shuwen. Overview of hybrid solid-liquid mixing automatic filling equipment[J]. Modern Machinery, 2011(5): 91-93.

[2] Liu Xiankun. Design and implementation of YTGZ-24500 filling machine based on PLC control system [D]. Shandong University, 2014.

[3] ZHOU Zhenxiong, XU Yujiao. Design of automatic six-wire synchronous filling control system[J]. Journal of Beihua University (Natural Science), 2012, 13(5): 604-607.

[4] Fan Guowei. Electrical Control and PLC Application Technology [M]. Beijing: People's Posts and Telecommunications Press, 2013.

[5] Xia Chunyan, Liu Xiujuan, Cheng Yan. Overview of the Structure of Liquid Filling Machine[J]. Journal of Jiamusi University (Natural Science Edition), 2000, 18(2):176-179.

[6] Xiang Xiaohan. Siemens PLC advanced application examples explained [M]. Beijing: Mechanical Industry Press, 2010.