ATLANTIS PRESS
*Atlantis Highlights in Material Sciences and Technology (AHMST), volume 1*
International Symposium "Engineering and Earth Sciences: Applied and Fundamental Research" (ISEES 2019)

# Transformable Systems of Spatial Structures Based on Bionic Analogues

Tsaritova N.G.
Department of «Town planning, building design»
FSEI he «Platov South-Russian State Polytechnic University (NPI)», Novocherkassk, Russia
ncaritova@yandex.ru

Buzalo N.A.
Department of «Town planning, building design»
FSEI he «Platov South-Russian State Polytechnic University (NPI)», Novocherkassk, Russia
buzalo_n@mail.ru

Tumasov A.A.
Department of «Town planning, building design»
FSEI he «Platov South-Russian State Polytechnic University (NPI)»
Novocherkassk, Russia

Platonova I.D.
Department of «Town planning, building design" FSEI HPE
FSEI he «Platov South-Russian State Polytechnic University (NPI)», Novocherkassk, Russia
irinplatonova@yandex.ru

Kurbanov A. I.
Department of «Industrial, civil engineering, geotechnical engineering and foundation engineering»
FSEI he «Platov South-Russian State Polytechnic University (NPI)», Novocherkassk, Russia
abakar0517@gmail.com

Kalinina A.A.
Department of «Industrial, civil engineering, geotechnical engineering and foundation engineering»
FSEI he «Platov South-Russian State Polytechnic University (NPI)»,
Novocherkassk, Russia

***Abstract* – The authors consider the classification of methods for the formation of spatial core coatings based on the proposed kinematic systems. The possibility of using kinematic transformable systems in pre-fabricated seasonal coverings of a small span for the construction of greenhouses, warehouses, tents, housing for nomadic peoples is noted. The article presents the simplest bionic designs of the hinge assembly of spatial rod coatings, such as the knot of elastic-flexible cord-rubber hoses, the knot of the frame-tent coating and the hinged knot with internal tension. A description of the possible use and assembly of such nodes on the ground. Comparison with bionic analogs of mammals, where rigid rods are bones, flexible connections are tendons. Articulated joints for coating structures of medium to 9 meters and large spans up to 30 meters are being developed and tested.**

***Keywords – spatial core structure; hinge; bionics, transformation, dynamics in architecture.***

## I. INTRODUCTION

To create a beautiful, healthy, beloved by the residents of the city, architects and builders often use non-standard design solutions, widely use the principles of architectural bionics - applied science on the application of principles of organization, functions and structures of wildlife in architectural and construction practice. Many researchers see the connection with bionic architecture in the works of the great Spanish (Catalan) architect Antonio Gaudi, the architect and engineer Santiago Calatrava, the English architect Nicolas Grimshaw, and also Sir Norman Foster. However, bionics was not widely spread due to the lack of technical, economic and technological advantages over traditional designs. At present, the principles of nature similarity are being introduced into a wide building practice, including in the form of mesh shells, since technological capabilities of design, manufacture of new materials and structures, the use of new installation methods have been expanded many times, including through the use of the method of layer-by-layer creation of physical objects using a digital 3D model [1].

Designs with curvilinear outlines, namely, coatings based on mesh shells, invented and patented by Russian engineer V. G. Shukhov [2], underlie many projects created by renowned architects. K In the 1980s, the improvement of the technology of prefabricated metal rods led to the emergence of an extremely serious and very elegant architecture, the British leader Norman Foster became the recognized leader. A great contribution to the introduction of carrying net shells based on bionic analogues into the world architecture was made by famous architects Frank Gehry, Nicholas Grimshaw, Santiago Calatrava.

## II. FORMULATION OF THE PROBLEM

The field of research related to the search for dynamic means of architectural shaping covers the transformation of core kinematic systems and technical means that allow physical changes in their parameters [3]. The source material for kinematic transformations was chosen for core networks based on triangulation (structure of equilateral triangular elements), which have congruence in transformations, flexibility due to the

connection of rods with hinges and rigidity of a single element (triangle).

This article presents the results of searches for mechanisms that allow the transformation of the original flat kinematic systems. To develop such a mechanism, it is necessary to create a hinged joint of the rods, which is possible both on the basis of the reproductive and on the basis of productive use of such bionic analogues as the musculoskeletal system of mammals (the human hand (Fig. 1), the spine of mammals, and limbs of winged mammals, etc.). The kinematic part of such systems is rigid rods (bones), flexible connections (tendons), articular bag, wing sheath. The productive method allows the use of various combinations of these elements. In this case, it is enough to use a hinge with one degree of freedom (cylindrical hinge), allowing spatial manipulations to be carried out at the expense of a multi-link system.

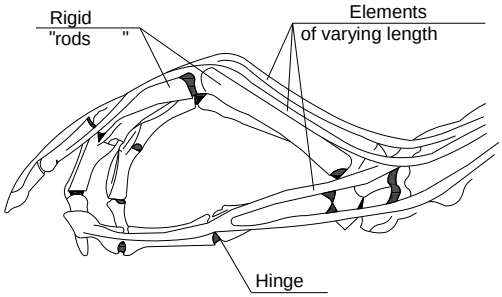


Fig. 1. The kinematic scheme of the human hand

Productive refraction of the natural kinematic model in the architectural-constructive structure imposes specific requirements for its implementation. They are expressed in the following:

1. Geometrically unchangeable scheme of the structure with a hinged connection of all the rods among themselves;

2. The presence of articulated connections between the rods, providing the necessary kinematics of the entire structure;

3. The ability to change the length of the rods of one or both layers of networks.

## III. RESEARCH QUESTIONS

Table 1 shows a variety of techniques for the formation of spatial coating systems based on the proposed kinematic systems.

The simplest bionic developments can be used for temporary pre-fabricated seasonal coverings of a small span (up to 9 meters) for the construction of greenhouses, warehouses, stalls, housing in campsites, etc.

The main elements of the transformed constructive system investigated in this work are rods and hinges connecting them at the ends. Spatial formations can be formed from one layer of the kinematic grid rigidly fixed along the contour, or from two layers interconnected. Such a structural plate can be bent by changing the lengths of the rods of the upper or lower grid. One of the directions in the development of dynamic architectural and structural systems is the creation of a swivel and a mechanism for changing the length of rods.

TABLE I. METHODS OF FORMATION OF STEM STRIPPING SYSTEMS

| ***Name of structure type*** | ***Method name*** | ***Sketch Forms*** |
|---|---|---|
| Single layer | Contour bending and fixing |  |
| | Bending and wrinkling |  |
| | Bending and locking on the circuit | 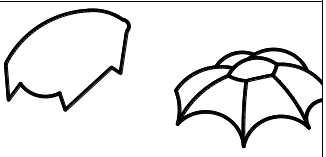 |
| two-layer | Bending by changing the length of the rods |  |
| Combined | Supporting flexible networks on rod "racks" | 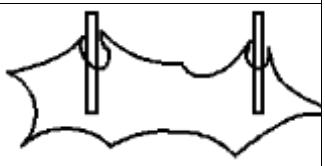 |
| | Leaning flexible networks on "core stiffness" | 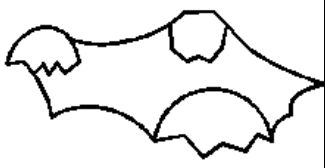 |
| | Supporting flexible networks on bulkhead arches |  |

## IV. RESULTS OF RESEARCH

One of the possible options for the swivel consists of three pieces of cord rubber hose connected in the middle by a bolt and nut (Fig. 1). According to the developed scheme, a flat kinematic system is assembled on a horizontal surface by inserting rods into the ends of the hose [4]. Rods of the same length (from 2 to 3 meters) from light metal pipes, wood, bamboo.

By the method of lifting the middle and closing along the contour, this kinematic system acquires the necessary spatial form, which is fixed by rigid attachment of the extreme nodes

to the base. This method using cordo-rubber hoses were made of greenhouse film frames with a span of up to 6 meters. The extremities of flying mammals (mice, dogs, foxes) have become a bionic analogue of a transformable frame tent coating [5]. The awning with the sleeves sewn in the necessary places is an analogue of the soft tissue of the wing of a mammal, the rods are like hinged bones (Fig. 2).

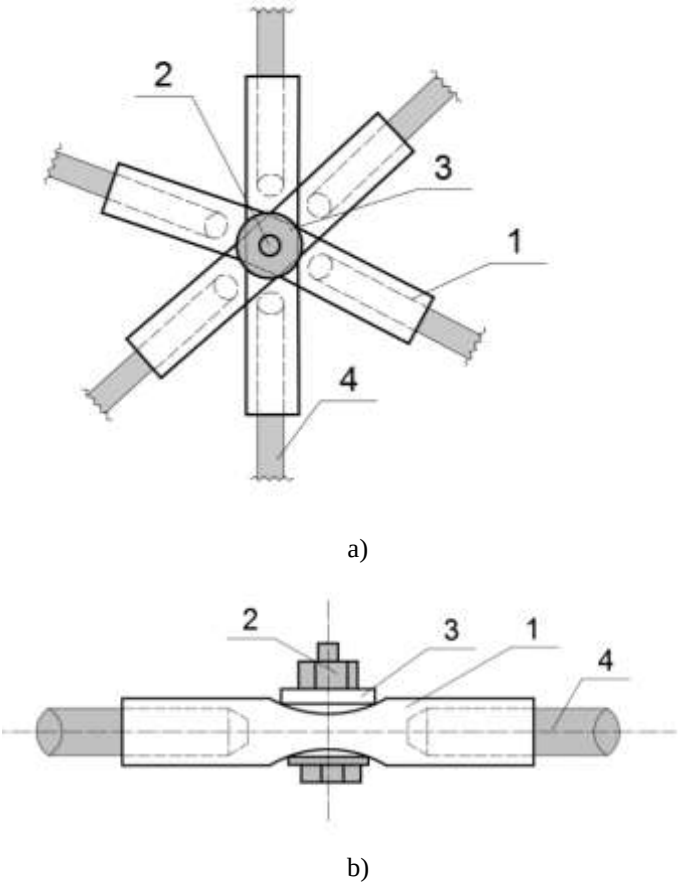


Fig. 2. Knot from elastic-elastic cord-rubber hoses. a) top view; b) side view. 1 - cord rubber hose, 2 - bolt with nut, 3 - washer, 4 – rods

An awning is spread on the surface of the earth, rods are inserted into the sleeves, consisting of two halves and a sleeve with a spring, which allows the assembly to reduce the length of the rigid element and then return it to the same length. The frame-tent structure assembled on a horizontal surface is transformed into an operational spatial position and fixed to the base. Tissue hinge can provide work coverage to the span of 6 meters.

The third joint and the entire kinematic system is built to tighten all the elements of the kinematic chain with an internal flexible connection - a cable; at the same time, the movable flat scan is broken and spatially rigid [7,8]. Cables are pulled along all core chains along three axes of triangulation. When the cable is released, the entire structure is assembled into an easily portable package. For the construction of a rod-shaped spatial structure, its flat kinematic base is spread on the surface of the earth, after the central part is lifted and all cables are tensioned, the resulting spatial coverage becomes rigid and is fixed to the base by contour units (Fig. 3)

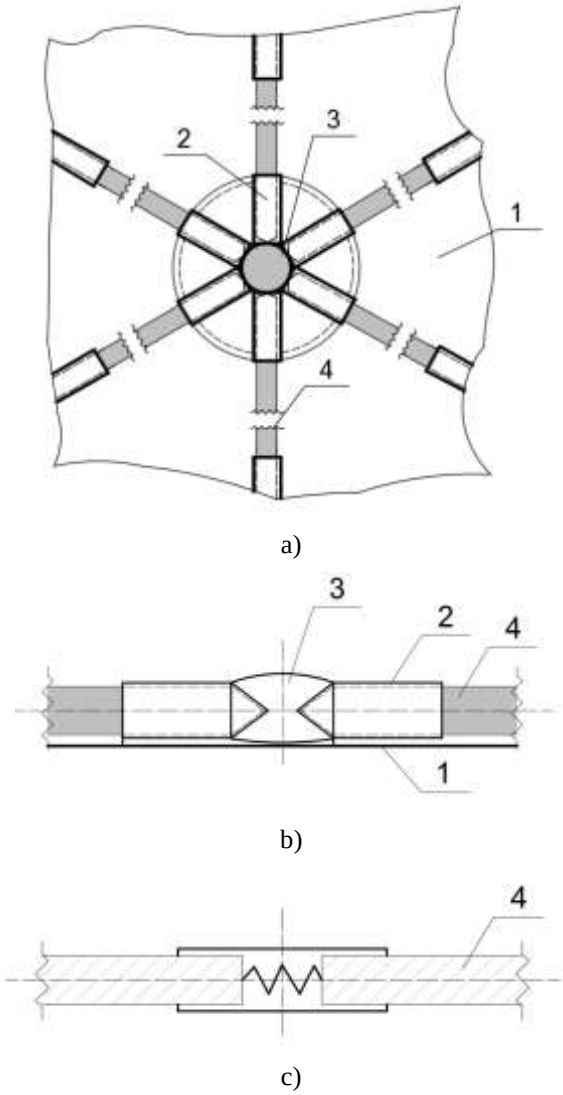


Fig. 3. Knot of frame tent cover. a) top view; b) side view; c) type of the rod: 1 - awning, 2 - awning sleeves, 3 - gasket from elastically compliant material, 4 - composite rod with a sliding spring

The completed sample of the transformable core structure has a span of about 6 meters with a rod length of 2 meters and a weight of the whole structure - 20 kg. The span of such a structural system can be increased to 12 meters [6].

At Herzen State Pedagogical University of Russia, the authors of the article developed another hinged connection of the rods of a transformable spatial framework (Fig. 4), designed to connect the rods of a fast-built lightweight spatial structure of a regular structure. The node consists of clamping discs with slots connected by a central clamping bolt, between which are located radially in plan with rods with spherical tips. In the disks on the surfaces facing each other, chamfers are cut along the edges of the holes for spherical tips. Between the slots, the disks relate to locking bolts, tightened after mounting the structure.

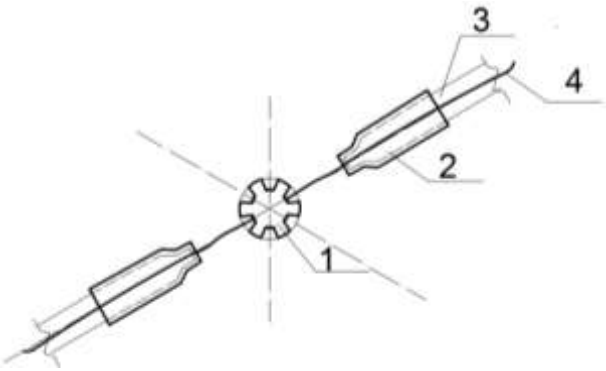


а)

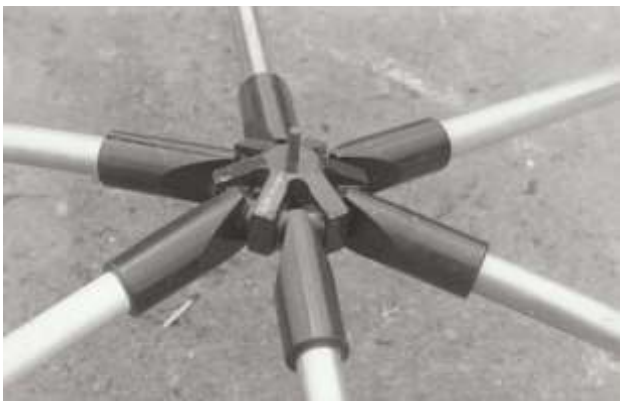

б)

Fig. 4. Hinge knot with internal tension. a) top view; b) photo of the unit: 1 - cast hinge element, 2 - rod tip, 3 - rod, 4 - cable

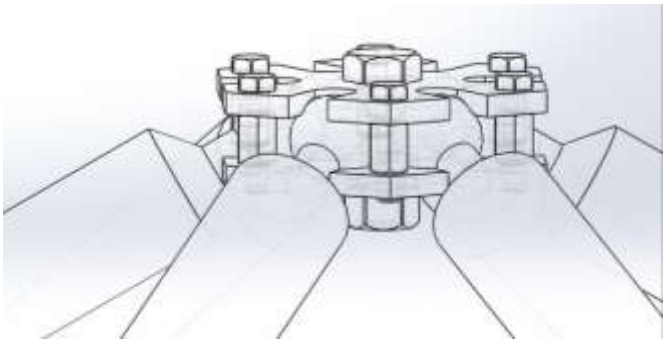

Fig. 5. Internal tension joint

To date, several proposals have been developed and a patent has been obtained for a constructive solution of a hinge assembly capable of connecting to 13 rods [9].

## IV. Conclusion

High aerodynamic and structural properties, increased seismic resistance, speed and ease of installation, the ability to deliver to remote areas of all components in a compactly packaged form, the ability to dismantle and transfer structures to a new place, a small load on the base allow the use of such structures with great efficiency.

The possibility of constructive-tectonic combinations in the process of spatial-temporal organization of the environment gives a wide range of means in solving figurative tasks, contributes to the development of creative activity [10]. The variability of the geometrical parameters of buildings and their forms based on a single set of structures, an uncomplicated installation process using the principles of self-introduction, provide prerequisites for new research in the field of improving this type of transformable architectural and structural systems.

The listed characteristics of transformable spatial core structures give reason to recommend such systems for construction in resort areas, especially those located in seismically dangerous zones.

## References

[1] K.V. Ragnarsdottir, H.U. Sverdrup, D. Koca, “Assessing long term sustainability of global supply of natural resources and materials”, in Sustainable Development, Ch. X, pp. 20–46, 2011.

[2] V.G. Shukhov, Selected Works, vol. 1, Construction Mechanics. Moscow: Academy of Sciences of the USSR, 1977, 192 p.

[3] A.A. Gaiduchenia, Dynamic architecture (Main directions of development, principles, methods). Kiev: Budivelnik, 1983, 94 p.

[4] A.A. Tumasov, “Architectural and compositional capabilities of flat kinematic structures. Architectural bionics”, Problems of theory and practice: Collection of articles. Moscow, 1986, pp. 63–67.

[5] Copyright certificate no. 1170087 USSR. Transformable frame tent coating. A.A. Tumasov 04/01/1985 of the States. USSR Committee for Inventions and Discoveries.

[6] A. Tumasov, Architectural-bionic constructive forms for rural residential and public buildings. Illustrated catalog of projects and works. Moscow: TSNTI, 1985, 3 p.

[7] A.A. Tumasov, N.G. Tsaritova, “Transformable spatial core structures of coatings”, International Research Journal, no. 12-3 (54), pp. 190–194, 2016.

[8] A.A. Tumasov, N.G. Tsaritova, A.I. Kurbanov, A.A. Kalinina, “Geometric Parameters of Rod Transformable Arched Systems”, Construction and architecture, vol. 5, no. 2 (15), pp. 135–140, 2107.

[9] The hinged unit of the spatial core structure of a regular structure: Pat. 2586351 Rus. Federation: IPC EV 1/58 / N.G. Tsaritova, N.A. Buzalo; applicant and patent owner of FSBEI HPE South-Russian State Polytechnic University (NPI) named after M.I. Platova, no. 2015100939/03; declare 01/12/15; publ. 06/10/16.

[10] A. Tumasov, N.G. Tsaritova, A.I. Kurbanov, A.A. Kalinina, “Geometric parameters of rod transformable arch systems”, Construction and architecture, vol. 5, no. 2 (15), pp. 135–140, 2017