ATLANTIS PRESS

Advances in Social Science, Education and Humanities Research, volume 362

5th International Conference on Physical Education, Sport, and Health (ACPES 2019)

Analysis of Facility Needs for Artistic Gymnastics to Optimize the Limited Space of School Arena

1st Tubagus Herlambang
Doctoral Program Sport Education Department
Postgraduate Universitas Negeri Semarang
Semarang, Indonesia
tubagusherlambang@yahoo.com

2nd Tandiyo Rahayu
Doctoral Program Sport Education Department
Postgraduate Universitas Negeri Semarang
Semarang, Indonesia
tandiyorahayu@mail.unnes.ac.id

3rd Sulaiman
Doctoral Program Sport Education Department
Postgraduate Universitas Negeri Semarang
Semarang, Indonesia
sulaiman@mail.unnes.ac.id

4th Tri Rustiadi
Doctoral Program Sport Education Department
Postgraduate Universitas Negeri Semarang
Semarang, Indonesia
roestiadi@yahoo.co.id

***Abstract*- Majority of sports organizations including gymnastics in Central Java Province are still using school arena which is quite small and not representative according to the rules of Federation Internationale de Gymnastics (FIG). Meanwhile, athletes must to train without any obstacles from external factors such us facilities. Study Purpose: To provide a solution which might be applied on the limited school area by doing field analysis and designing appropriate model, especially for uneven bars apparatus in gymnastics. This is a research and development, the protocols have been approved by research committee of Post Graduate Program, Universitas Negeri Semarang and Central Java Province Federation of Gymnastics (PERSANI). Materials in this research are school arena, the uneven bars. Observation and measurement were used to collect the data, then analyze by using a software Computer Aided Design. Data are showed as descriptive quantitative. To facilitates an uneven bars can be built either by using wood logs or fiber glass with adjustable poles (lower: 1.61-1.70 meters; upper:2.41-2.50 meters), and with properties of handrail such as tension: 13.64 Newton, displacement: 1.17 mm, strain: 4.428 m/m. Modified uneven bars has been designed to optimize training session in limited school area.**

Key words: sports engineering, elite sport, gymnastics

I. INTRODUCTION

Nowadays, people who are living in modern world are able to access supportive facilities easily. This is manifestation of science and technology, one of many branches of science and technology known as sport engineering which focus on creating and developing tools or equipment for sports. Furthermore, in term of sport engineering principles such as rich, diversity, comprehensive and balance are must be presented in every created product. Techniques in sport are able to present a good illustration about basic law of sports mechanic also in order to create a new equipment as supporting facilities, [1]

Based on the observation at province level which include thirty-five district federation and province federation of gymnastics in Central Java. There are only five city federations (Semarang, Banyumas, Surakarta, Brebes, Sragen) using sport arena to do practice while the remain thirty federation still using school arena. Considering to Code of Points from Federation Internationale de Gymnastique, school arena is not representative place to set up particular equipment like uneven bars because it is limited place (7 meters width X 24 meters length X 6 meters height). Moreover, it is important to remember that the fundamental aspect to improve movement skill in artistic gymnastics is the availability of training facilities including building and equipment.

The application of sports engineering is to over come the weak and the lack in equipment usage which then provides a new design and the balance of gymnastics equipment, in this case is uneven bars. This is one approach to fulfill the technical requirements in developing its system, as well obligates every gymnast to develop fully their techniques, [2]. The arrangement of mechanical installation is needed in order to set up constantly uneven bars either for daily practice or for competition. Computer Aided Design also known as CAD is needed to calculate the best estimation for gymnastics equipment and in order to support design conceptual of building construction, [3]. Therefore, the purpose of this study was to analyze the needs of facilities (building and equipment) of artistic gymnastics especially for uneven bars using computer aided design in order to optimize limited room as alternative media to train and athlete development in Central Java Province Federation of Gymnastics (PERSANI).

II. MATERIALS AND METHODS

School Arena is a multifunction place which can be used as teaching room during formal education activity and as fitness center for elite athlete or other physical activities. The average area of school arena in Central Java Province is 7X24 meters2 with height 6 meters, in other hand uneven bars needs more capacity than the regular its school arena. This is research and development are procedures from Sugiyono and Borg & Gall.

Uneven Bars, according to Amy Van Deusen, it is can be defined as an apparatus in women's artistic gymnastics. The

bars are the second exercise, completed after the vault. The Olympic order of events is the vault, uneven bars, balance beam, and the floor. The uneven bars are sometimes called the "uneven parallel bars," "asymmetric bars" or simply the "bars." The bars are parallel to each other and set at different heights, with the low bar set to about 5 and a half feet above the floor and the high bar usually taller than 8 feet. This height is adjustable, and junior Olympic gymnasts and collegiate gymnasts often use the bars at different heights. For elite gymnasts, however, these measurements are standardized. The width between the bars is approximately 6 feet.

The apparatus consists of two bars, which run parallel, but at different heights, and are carried by a support base. The support base has four uprights, which are held by tension cables (Ø max 1 cm) anchored to the floor. Each bar is carried by 2 supports. One low and one high support are connected to a floor device and a width adjustment device, [4].

The bar was modelled as a point mass attached to horizontal and vertical linear springs (obeying Hooke's law) with stiffness coefficients determined from static loading. The stiffness coefficients of the bar were determined with three different tensions in the stabilizing cables of the high bar. [5].

Code of Point (COP) Artistic Gymnastics is a rulebook that defines the scoring system for each level of competition in gymnastics. On uneven bars, a gymnast navigates on different handling at different level of height according to the setting up, however the width is adjustable. Gymnast doing swing, rotation, transition and free hands during the movement on uneven bars then finishing with dismount movement, [6]. Demonstration of training routine on uneven bars have to notice on things such as: 1) Gymnast does kip as the first step, at this point of time scoring activity has been started; 2) Gymnast must demonstrate required compositions based on the COP including flight element from HB to LB, flight element on the same bars, different grips and non-flight element with min, 360° rotation, [7].

Computer Aided Design (CAD) is a computer program (software) used to describe a product or partial of product, it presents lines or other symbols for described product, could be shown in two or three dimensions. It is known to be used to improve product design by using older concept such us documentation. Design development, design analysis, design simulation, design evaluation, design modification and improvement are known as CAD functions. In this research, to determine which uneven bars apparatus can be in the settings in a limited area, the researcher use software Computer Aided Design for design analysis, design simulation, design evaluation and determine which uneven bars will be used in a limited area.

Procedures in this is research and development are procedures from Sugiyono and Borg & Gall with little modification, and it was carried out with approval by the post graduate institute of Universitas Negeri Semarang. The following original procedures are: 1) Potency and problem, 2) Data collection, 3) Product design, 4) Design validation, 5) Design revision, 6) Product trial, 7) Product revision, 8) Usage trial, 9) Product revision, and 10) Massive production, (Sugiyono, 2009; Borg & Gall, 2003). The following additional procedures are: 1). Product analysis: Assessment toward gymnastics characteristics especially to uneven bars. 2) Developing innovated product based on needs analysis of artistic gymnastics facilities by using CAD to optimize limited school area: Purposes analysis and product features, as well gymnast characteristic analysis. 3) Expert's Judgement: Expert on gymnastics coaching, and expert on gymnastics.

III. RESULT AND DISCUSSION

Integrating multi-functional spaces and structures in the initial design phase of the indoor sports arena is an important part of optimizing multi-purpose sports, [6]. Multi-function sports arena is an important part in sports achievement, such as artistic gymnastics. To fulfill the multifunctional arena, it is necessary to determine the design and arrangement of gymnastic equipment appropriate with the arena used by athletes and artistic gymnastics trainers.

Sport engineering gives good illustrations of the basic laws of theoretical mechanics and interesting examples that attract the students' attention to this academic discipline. Differential equations and general theorems of dynamics allow us to describe the considered phenomena qualitatively correctly. The obtained solutions may be refined by the application of more sophisticated models, [8].

To determine the design and calculation of artistic gymnastics apparatus in this study using CAD (Computer Aided Design) software, because it is part of a multidisciplinary study between sports using technique or what is called as sport engineering. Likewise the need for sports engineering in artistic gymnastics is based on Code of Points requests for various types of cutting-edge techniques, one of which is the uneven bars tool, [2].

To find out the results of calculations from the uneven bars apparatus developed by the steps used in this research development. Finite Element Method (FEM) was applied on Solidworks Model (partial of CAD) to analyze the engineering simulation of uneven bars. The original formula for FEM could be seen in Figure 1 with estimation of gymnast's body weight up to 80 kilograms. Further, based on the result of FEM Solidworks Model of CAD, each material property of modified uneven bars could be seen clearly in Table 1.

$$\begin{aligned} F &= \text{Mass x Gravity} \\ &= 80\ \text{Kg x } 9{,}8\ \text{m/s}^2 \\ &= 784\ \text{Newton} \end{aligned}$$

Figure 1. FEM formula with estimation of gymnast's body weight up to 80 kilograms

TABLE 1. MATERIAL PROPERTIES

Num.	Property	Value	Units
1	Elastic Modulus	1.9e+11	N/m^2
2	Poisson's Ratio	0.29	N/A
3	Shear Modulus	7.5e+10	N/m^2
4	Mass Density	8000	Kg/m^3
5	Tensile Strength	517017000	N/m^2
6	Compressive Strength		N/m^2
7	Yield Strength	206807000	N/m^2
8	Thermal Expansion Coefficient	1.8e-05	/K
9	Thermal Conductivity	16	W/(m.K)

Uneven bars consisted of two wood logs or could be replaced by fiberglass. Each bar rests on vertical poles with different height, the lower bar must be placed about 1.61 until 1.70 meters above the floor, while the upper bar is about 2.41 until 2.50 meters, and all poles must be adjustable. Visualization of the modified design is provided in Figure 2, with simulation results on handrail provided in Table 2.

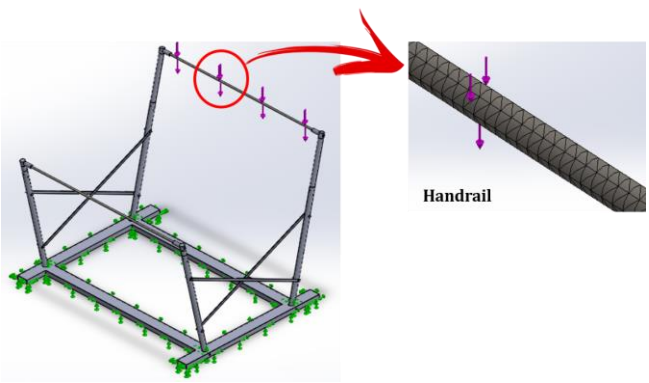

Figure 2. Visualization of modified uneven bars for limited school area with load and constrain (purple arrow: loading direction, green arrow: fixation).

TABLE 2. SIMULATION RESULTS ON HANDRAIL

Num.	Property	Capacity
1	Tension	13.64 Newton
2	Displacement	1.17 mm
3	Strain	4.428 m/m

CAD has been used to modify original design for better purposes in basketball players with special needs. Modified wheelchair is lighter 30% compared to the original design by using CAD program through analysis of anthropometric data, wheelchair model and new wheels. Several tests were performed to evaluate the new design, and it shows promising result in order to improve technical work with athlete's performance.

Here the material specifications product of uneven bars which can be seen in the table below:

TABLE 3. SPECIFICATION MATERIALS OF DEVELOPMENT UNEVEN BARS

No	Materials	Standard Uneven Bars	Developed Uneven Bars
1	Diameter high bars pipe	5,5 cm	6,2 cm
2	Diameter thick fundamental construct	6 mm	6 mm
3	Length of basic construction uneven bars	1,2 m	2 m
4	Fundamental construct uneven bars	-	2,54 m
5	Diameter of buffering pipe	4,3 cm	5 cm
6	Diameter stabilizer pipe	-	26 mm
7	High bars	2,45 m - 2,5 m	2,45 - 2,5 m
8	Low bars	1,5 m - 1,70 m	1,5 m - 1,70 m
9	Diameter uneven bars handgrips	4,1 cm	4,1 cm
10	Diameter cable stabilizer	5,5 mm	-

From the description above, the development of uneven bars tools using CAD software can be assumed in accordance with the needs of the field in order to evaluate uneven bars products that can be installed in a limited area without using a cable stabilizer to support the skills of artistic gymnastics athletes in Central Java.

IV. CONCLUSION

According to the results and discussion above, researcher state that modified uneven bars has been designed to optimize training session in limited school area.

REFERENCES

[1] M. A. M. Berger, M. Van Nieuwenhuizen, and M. Van Der Ent, "Development of a new wheelchair for wheelchair basketball players in the Netherlands," vol. 34, pp. 331–336, 2012.

[2] C. Liang and X. Liang, "Dynamic Mechanism of Sports Cutting-edge Technique Development and Innovation," vol. 34, pp. 337–342, 2012.

[3] M. Turrin, D. Yang, A. D. Aquilio, R. Sileryte, and Y. Sun, "Computational Design for Sport Buildings," *Procedia Eng.*, vol. 147, pp. 878–883, 2016.

[4] F. I. G. A. Norms, "FIG Apparatus Norms 2017," 2017.

[5] D. G. Kerwin and M. J. Hiley, "Estimation of reaction forces in high bar swinging," pp. 21–30, 2003.

[6] W. Pan, M. Turrin, C. Louter, S. Sariyildiz, and Y. Sun, "Integrating multi-functional space and long-span structure in the early design stage of indoor sports arenas by using parametric modelling and multi-objective optimization," *J. Build. Eng.*, vol. 22, no. January, pp. 464–485, 2019.

[7] R. I. D. E. Gymnastique, "2017 – 2020 CODE OF POINTS Women ' s Artistic Gymnastics," 2020.

[8] R. Rydakov, Y. Nyashin, O. Ilyalov, and R. Podgaets, "Procedia Engineering," vol. 2, no. 2, pp. 2763–2768, 2010.