Continuous Feed Roller Grinder Design and Its Finite Element Analysis Based on Solid Works

Wan Hongqiang
School of Mechanical Engineering
Xi'an Technological University
Xi'an, China
E-mail: 413162931@qq.com

Han Quanli
School of Mechanical Engineering
Xi'an Technological University
Xi'an, China
E-mail: hanqljx@163.com

Liu Zhihao
School of Mechanical Engineering
Xi'an Technological University
Xi'an, China
E-mail: 1003575444@qq.com

Sun Zhengyang
School of Mechanical Engineering
Xi'an Technological University
Xi'an, China
E-mail: 260686289@qq.com

***Abstract*—After the workpiece is processed, the barrel mill is widely used as a burr removal device. Therefore, in order to improve the efficiency of burr removal and enhance the polishing effect on the surface of the workpiece, the conventional roller grinder is improved in design, and the continuous batch grinding method is used instead of the conventional batch grinding method, and the automatic workpiece transfer device is added after the end of the grinding. , thereby increasing the grinding efficiency. Using SolidWorks software, three-dimensional solid modeling and virtual prototype assembly were carried out on the feeding device, grinding device and conveying device. The static analysis of the roller bracket was carried out by ANSYS Workbench software, and the rationality of the design was verified. The results show that the burr removal rate is increased by 10%~20% compared with the traditional grinding machine, and the surface roughness is improved by 1~2, which improves the production efficiency to a certain extent.**

Keywords-Roller Mill; Burr Removal; Surface Polishing; 3D Solid Modeling; ANSYS Workbench

I. INTRODUCTION

At present, burr and surface quality of workpiece play a decisive role in the assembly of workpiece. Burr removal and surface polishing have always been an important research topic, which has been widely studied at home and abroad.

Burr removal methods are mainly divided into artificial deburring, mechanical deburring, ultrasonic processing deburring, magnetic abrasive grinding deburring, abrasive flow deburring and other deburring methods[1-2]. As a traditional burr removal method, manual deburring mainly uses traditional tools such as files and wire brushes to process, and when processing some aspheric workpieces, higher personnel capacity are required, and the efficiency of the whole processing process is low[3]. Mechanical deburring mostly uses horizontal drum grinding method to process, which can achieve the effect of deburring through the operation of the drum, the fall of workpiece and abrasives, and the collision and friction between each other[4]. Ultrasound processing deburring, through ultrasonic vibration, achieve the purpose of deburring and surface polishing by the friction between abrasive fluid and workpiece surface[5]. Magnetic abrasion is mainly through the role of magnetic field, so that magnetic particles with cutting ability can friction and extrude the workpiece surface, in order to achieve the purpose of burr removal[6-7]. Abrasive flow deburring, select different abrasives according to the workpiece material, eject abrasive flow through high pressure, debur the surface of the workpiece, and achieve the purpose of surface polishing. In the whole abrasive flow processing, there is no high temperature and no secondary burr[8].

In foreign countries, Franci Pusavec et al. used free abrasive polishing technology to polish special-shaped surfaces to achieve the purpose of surface polishing[8]. Sushil M et al. used abrasive flow polishing method to polish the surface of workpiece containing a large amount of silicon carbide. Through orthogonal experiments, the optimum combination of process parameters for polishing silicon carbide composites was obtained. KLOPFSTEIN et al. jointly developed the ultrasonic-chemical composite polishing technology, which combines the ultrasonic technology with the chemical technology. Using monomer silicon as the sample, the purpose of deburring is achieved with the cooperation of the ultrasonic technology, and the surface roughness of the workpiece is reduced by 5-15 nm[11].

Based on these, make a profound study in the drum grinding mode, the drum grinding process has low cost, simple structure, and is suitable for grinding various parts. It has been widely used. However, there are a series of problems in traditional drum grinding process, such as batch grinding, low efficiency, unreliable belt transmission,

excessive noise and so on[12-13]. Therefore, this paper will introduce a drum grinder with higher efficiency, more stable transmission and lower noise, so as to facilitate the removal of burrs and improve the surface quality of the workpiece in mechanical processing.

II. Overall Design and Main Parameters of Drum Grinding Machine

The machine is mainly composed of three parts: feeding device, grinding device and conveying device. Figure 1 illustrates the overall structure. Figure 2 shows the rendering diagram of the overall three-dimensional model of the drum grinder designed by Soild Works software[14-15].

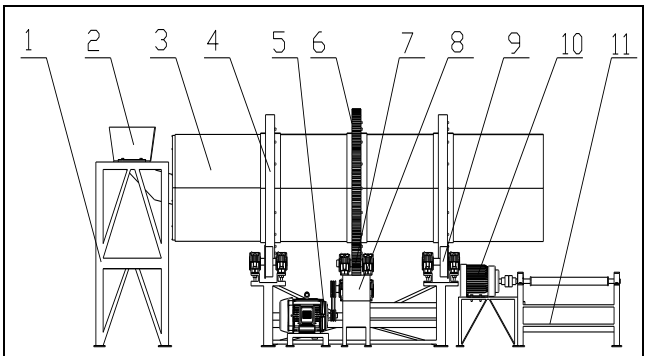

1.Feeding frame; 2.feeding hopper;3.Roller;4.Large friction wheel;5.Electric machinery;6.emicircle rack;7Big gear wheel;8.Pinion;9.Small friction wheel;10.Gear motor;11.Transport mechanism

Figure 1. Overall structure diagram

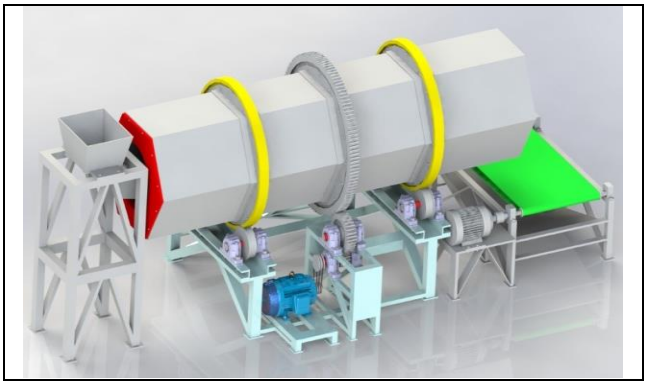

Figure 2. Overall model of the roller mill

Figure 3 is the flow chart of the drum grinding machine. Parts and abrasive materials enter into the abrasive device through the feeding device, and the parts and abrasive materials are separated by the transmission device after the parts are abrasived. On the whole, uninterrupted supply and processing of parts and abrasive materials can be realized to achieve pipeline effect. Working Principle: When the drum rotates at low speed, the workpiece and the abrasive rotate together. Because the workpiece and the abrasive fall continuously in the drum under the influence of gravity, they collide, extrude and friction with each other, so as to deburr and smooth the surface.

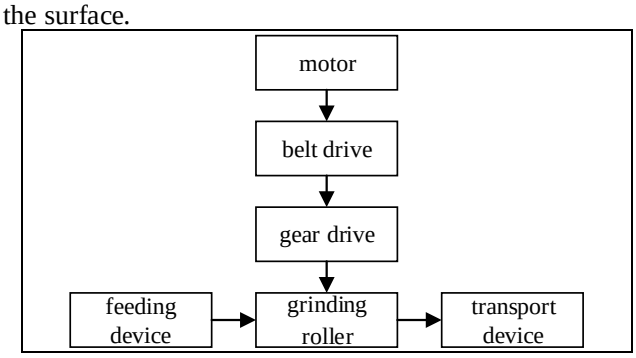

Figure 3. Overall processing flow

A. Design of Feeding Mechanism

The feeding mechanism is divided into two parts: the feeding frame and the feeding hopper. Its function is to facilitate the faster and convenient entry of workpieces and abrasives into the drum device. Feeding frame is mainly used to support feeding hopper. The three-dimensional model of the feeding mechanism is shown in Figure 4. The design parameters of the feeding device are shown in Table I.

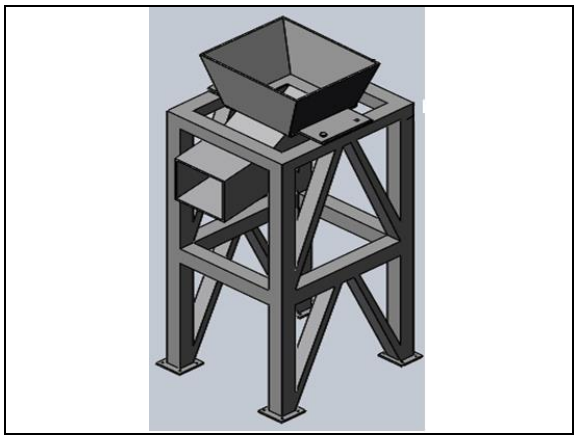

Figure 4. 3D model of the feeding mechanism

TABLE I. Feeding device design parameters

Classification	Size（mm）	Material	Connection mode
Feeding frame	800×700×1640	Square steel tube	Welding
Feeding hopper	600×500×300	Square steel tube	Welding
Feed port	300×300		

B. Design of Roller Device

The roller device is divided into roller, gear, belt, frame and other parts. The roller is used for the storage and grinding of the workpiece. It rotates through belt and gear transmission, and then drives the workpiece and abrasive inside the roller to rotate, resulting in drop friction to finish grinding. The design structure is hexagonal, and the blades are designed internally to facilitate grinding more fully. The

whole roller is joined by welding, with openings on both sides and flanges at one end of the inlet and outlet. The opening of the flange is round, and the diameter of the flange is smaller than the diameter of the drum, so that the parts can enter the drum smoothly. The middle part outside the drum also has an interface for connecting the friction wheel and the semi-circular gear. The three-dimensional model of the roller is shown in Figure 5.

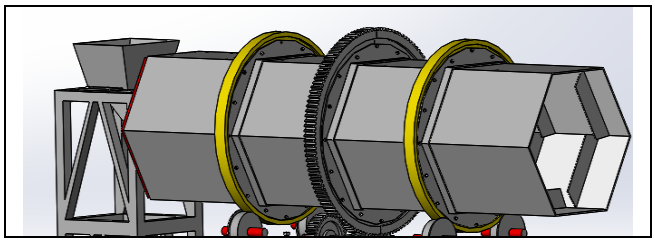

Figure 5. 3D model of the roller device

The gear 1 is connected with the belt shaft and meshes with the gear 2. Design semi-circular rack, and two semi-circular racks constitute one complete gear, connected outside the roller. By meshing with gear 2, the effect of rotating the drum is achieved. The gear distribution model is shown in Figure 6.

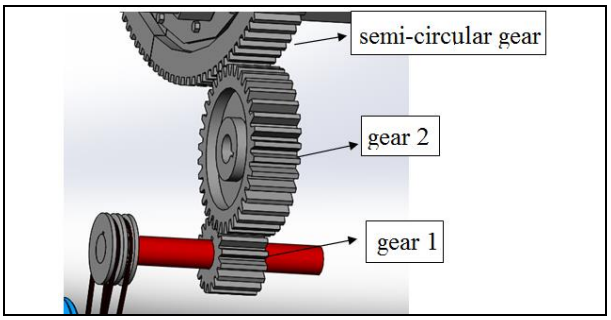

Figure 6. 3D model of gear distribution

Calculating the quality of the drum: The drum is welded by six steel plates, each of which has a dimension of 4000×420×10mm,

$$m=\rho V \tag{1}$$

m——Total mass of drum, kg, ρ——Density of steel 7850kg/m^3, V ——Volume of steel plate, m^3。

The calculated total mass of the drum is 131.88 kg. When the drum is fully loaded, the total mass of abrasive and workpiece added is 50 kg, so the total mass of drum is 181.88 kg when it is fully loaded.

C. *Design of conveyor*

In the transmission device, the motor is connected with the transmission shaft through the coupling, thus driving the conveyor belt and realizing the work piece transmission function. The three-dimensional view of the overall installation of the conveyor is shown in Figure 7. The main design parameters of the conveyor are shown in Table II.

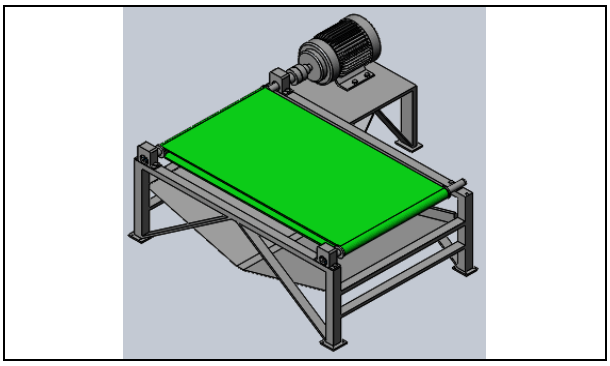

Figure 7. Conveyor overall

TABLE II. MAIN DESIGN PARAMETERS OF THE CONVEYOR

Motor	Model power	XWD5.5-6-43.t 5.5KW
Roller shaft	Length×diameter（mm）	1400×50
Conveyor bandwidth	Length×width（mm）	1400×840
Coupling	Model	GYH5flange coupling
	Active end	Y-Shaft Hole, A-Shape Keyway, d=40mm, L=112mm
	Driven end	J1 type shaft hole, A type keyway, d = 42mm, L = 84mm

The frame of the conveyor is welded. The frame of the conveyor is shown in Figure 8.

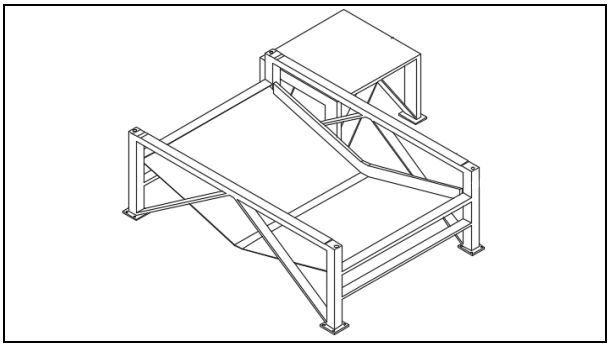

Figure 8. Conveyor rack

III. DESIGN AND FINITE ELEMENT CALCULATION OF DRUM FRAME

The whole drum bracket is made of 45 steel, welded by steel structure and supported by square pipes. According to the actual needs of the drum rack design, the rack structure as shown in Figure 9, the drum is on the top of the rack, connected with a small friction wheel on the rack through the contact of friction wheels, contact with the friction wheel on the drum, and make the drum rotate through the role of force .

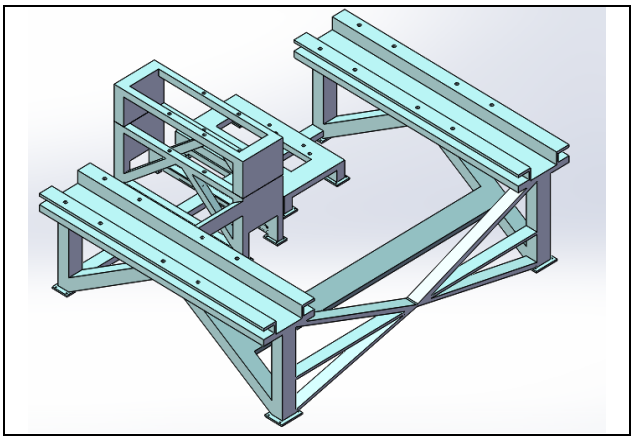

Figure 9. Outline structure of the roller bracket

The drum bracket in the roller device is the key part in the overall design, so it should be analyzed by finite element method to determine the rationality of its design. ANSYS Workbench software is used for static analysis of drum bracket[16]. The specific operation is as follows:

- Establish the analysis project, and import the model into ANSYS by Soild Works to save the format file of. IGS. The material is 45 steel with elastic modulus E=2×105MPa, Poisson's ratio u=0.3 and density 7.85×103 kg/m3.
- Increasing the material properties of the model, dividing the mesh, dividing the mesh size of the drum support into 10 mm, the number of nodes after dividing the mesh is 381058, and the number of elements is 230 988. The meshing diagram is shown in Figure 10.
- Imposing loads and constraints. The contact surface at the bottom of the drum bracket is restrained as a fixed fulcrum. When the drum is fully loaded, the total mass is 188.88 kg. Therefore, the load applied on the bracket is set at 2000N. The pressure on each surface is about 500N, and the direction is the direction indicated by the arrow (Figure 11).
- Computation. From the point of view of stress nephogram (Figure 12), the maximum stress of the drum support is 0.532 Mpa, and the parts with high stress are concentrated at the bottom of the contact surface of the drum support. From the point of view of strain nephogram (Figure 13), the maximum strain of the drum support is the same as the maximum stress, the maximum strain value is 5.796e-7, and the strain is small; the maximum stress is less than the allowable stress (120 MPa), so the strength of the drum support meets the design requirements; from the angle of deformation (Figure 14), it can be seen that the maximum total deformation of the support is 0.00398mm, which mainly occurs at the contact surface of the fixed gear shaft at the top of the support[17-18].

The overall analysis shows that the drum support design is reasonable and meets the design requirements.

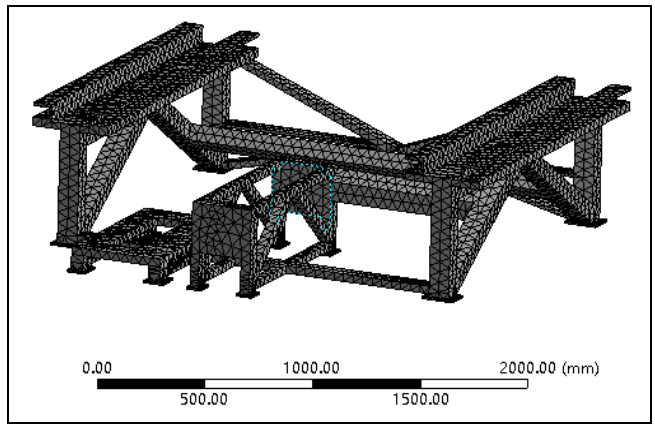

Figure 10. Drum bracket meshing

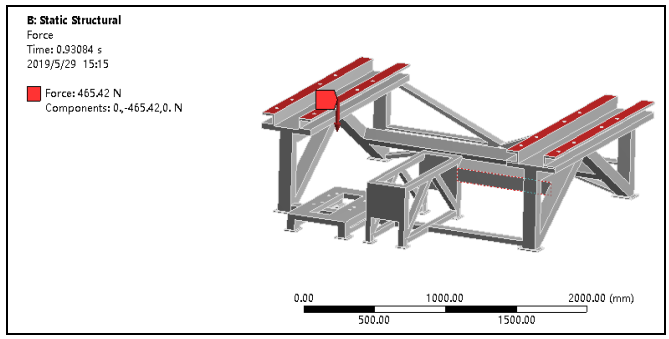

Figure 11. Shows the force surface and the direction of the force

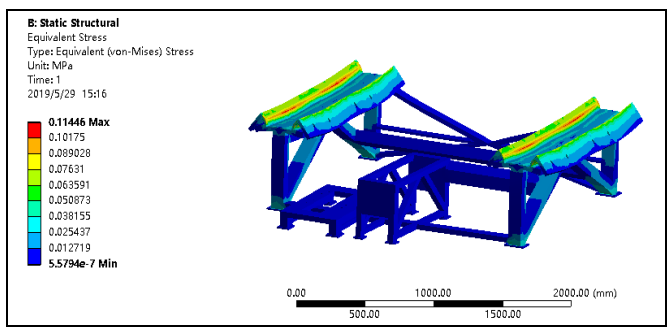

Figure 12. Roller bracket stress cloud

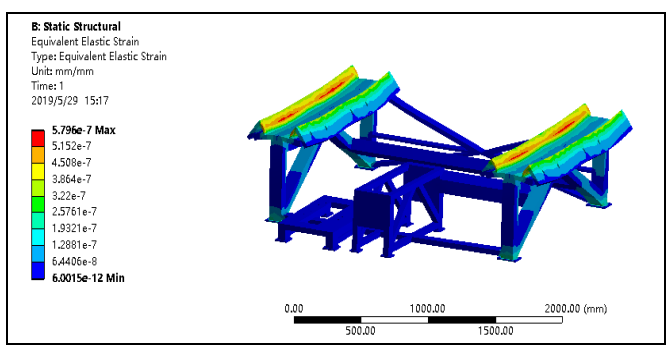

Figure 13. Drum bracket strain cloud diagram

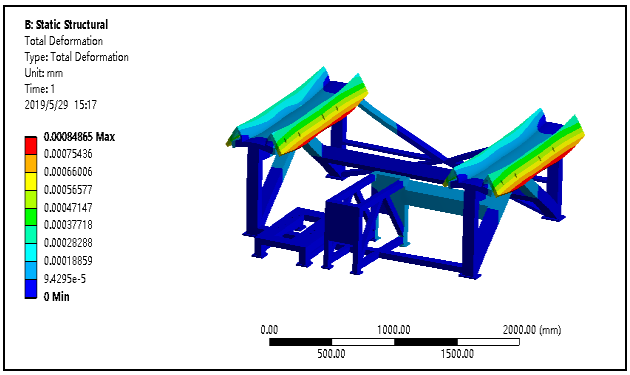

Figure 14. Bracket total deformation cloud map

IV. CONCLUSION

In this paper, the three-dimensional model of the roller grinder is constructed by SoildWorks software, and the improvement is made on the basis of the traditional roller grinder, and the feed mechanism and transmission mechanism are added, so that it is more reasonable in structure and more widely applied. The specific scheme is the use of pulley and gear transmission, the advantage is that the gear transmission is more accurate, the deceleration effect is obvious, so that the control accuracy is more accurate; Parts and abrasive materials are delivered after grinding is complete. Finally, the finite element analysis of the drum bracket is carried out by ANSYS Workbench software, and the maximum equivalent stress of the bracket is less than its used stress value, which proves the rationality of the design. The results show that the total quality of the continuous feed roller grinder designed is 131.8kg, the total quality of the processable workpiece and abrasive is 50kg, which can improve the burr removal rate of the workpiece after grinding processing by 10% to 20%, and the surface roughness can be improved by 1 to 2 levels.

ACKNOWLEDGMENT

This study is funded by Scientific research project of Key Laboratory of Shaanxi Provincial Department of Education (17JS060).

REFERENCES

[1] DENG C H. Proper use of XMW-30 horizontal centrifugal grinder[J]. Manufacturing Technology & Machine Tool, 2007(10):92-94.

[2] Kwon B C, Kim K H, Kim K H, et al. New abrasive deburring method using suction for micro burrs at intersecting holes[J]. CIRP Annals - Manufacturing Technology, 2016, 65(1):145-148.

[3] SHEN Y F, HE X B, LIU Y Y. Research Status and Development Countermeasures of Metal Cutting Burrs.[J]. Tool Engineering, 2018, 52(09):10-14.

[4] XU Z F. Present Status of Deburring Processing for Mechanical Parts Machine Tool & Hydraulics[J]. Machine Tool & Hydraulics, 2010, 38(08):111-113+110.

[5] WAN H Q, HAN P Y, GE S, LI F C, LIU Z H. Development of ultrasonic vibration polishing method on workpiece surface[J]. Diamond & Abrasives Engineering, 2018, 38(02):94-100

[6] JIAO A Y, ZHANG L L, LIU X L, CHEN Y. Experimental Study of Deburring in Al 7075 Cross Hole EdgeBased on Magnetic Particles Grinding[J]. Surface Technology, 2019, 48(04):302-309.

[7] YUN H, HAN B, CHEN Y, et al. Internal finishing process of alumina ceramic tubes by ultrasonic-assisted magnetic abrasive finishing[J]. International journal of advanced manufacturing technology, 2016, 85(1-4): 727-734.

[8] DUAN Z B, YA G, DONG Z G, LIU J C. Controlled Abrasive Flow Machining Forming Inverted Cone Angle Microporous[J]. Machinery Design & Manufactur, 2018(03):116-119.

[9] Franci Pusavec, Jani Kenda. The Transition to a Clean, Dry, and Energy Efficient Polishing Process: An Innovative Upgrade of Abrasive Flow Machining for Simultaneous Generation of Micro-geometry and Polishing in the Tooling Industry[J]. Journal of Cleaner Production, 2014, 76(76):180-189.

[10] Sushil M, Vinod K, Harmesh K. Experimental Investigation and Optimization of Process Parameters of A1/SiC MMCs Finished by Abrasive Flow Machining[J].Advanced Manufacturing Processes, 2015, 30(7):902-911.

[11] KLOPFSTEIN M J, UHISLENI R, LUCCA D A, et al. Surface characteristics of micro-ultrasonically machined(100)silicon[J] International Journal of Machine Tools and Manufacture, 2008, 48(3);473-476.

[12] YAO M R, WAN H Q, LI F Y.Present Status of Burr Control and Debarring Process on Mechanical Elements[J]. New Technology & New Process[J]. 2005(12): 20-22.

[13] TIAN C L. Research on high-speed grinding mechanism of fixed abrasive and surface quality of workpiece.[D].CHANGCHUN: Changchun University of Science and Technology, 2005:21-23

[14] GAO J Q, YU P, GAO S L, et al. The Design and Simulation of Centrifugal Glass-Wool Boards Drilling Mechanism, [J].Machinery Design & Manufacture 2014 (01): 7-10.

[15] CHEN L, FU Y Z, YANG S, et al. Research on DF deep hole machining system based on Research on DF Deep-hole Machining System Based on the Soildworks Animation Simulation[J]. Journal of Hebei Institute of Architecture and Civil Engineering, 2017, 35(03): 119-122.

[16] ZHU L. Finite element simulation analysis of gasket based on Workbench[J].Neijiang Technology, 2019, 40(02):38+44.

[17] LIU Y Q, ZHAO M Q, LIU F, YANG T J, ZHANG T, LI F L. Simulation and Optimization of Working Parameters of Air Suction Metering Device Based on Discrete Element[J]. Transactions of the Chinese Society for Agricultural Machinery, 2016, 47(07): 65-72.

[18] ZAHNG Y J, XU H M, LIU S, WANG C L, JIANG W. Finite element analysis and topology optimization of hammer-type feed crushing frame[J/OL]. Journal of Huazhong Agricultural University, 2019(04):1-8.