ATLANTIS PRESS

Advances in Engineering Research, volume 188

International Conference on Aviamechanical Engineering and Transport (AviaENT 2019)

Emergency Modes Modeling in Non-Traction Consumers Power Supply Systems

Yuri Bulatov
Bratsk State University
Bratsk, Russia
bulatovyura@yandex.ru

Andrey Kryukov
Irkutsk State Transport University
Irkutsk National Research Technical University
Irkutsk, Russia
and_kryukov@mail.ru

Evgenia Alekseenko
East-Siberian Directorate for Energy Supply of Transenergo Russian Railways
Irkutsk, Russia
alev_ia@mail.ru

***Abstract*—The use of distributed generation (DG) plants, which includes renewable energy resources, allows to stabilize voltage levels, reduce losses in networks and to free couplings transfer capacities. Power quality can be enhanced based on DG in railroads power supply systems (RPSS), as well power supply efficiency and uninterruptedness of power consumers supply. However, when DG is used, a problem arises associated with the short circuit currents growth caused by additional power sources. To resolve this problem, development of methods emergency modes modeling in RPSS is required, when RPSS are equipped with DG plants. The article contains results of emergency modes study in power supply systems, with emergency modes caused by short circuits. A non-traction consumers' individual power supply region was modeled, which was connected to a traction substation through a DC link and which included the following DG plants: turbogenerator of mini-cogeneration plants; hydrogenerator of micro-hydropower plant; a wind power generation plant (WPGP) based on synchronous machine; WPGP based on DC machine and a solar power plant. The modeling results allow us to make the following conclusions: when DG plants are used, short circuits currents are growing which requires additional check of the switching equipment and changing relay protection setpoints to ensure selectivity; using DC link allows to significantly reduce short circuit currents, even when feed is available from DG plants; in case of two-phase short circuit a significant distortion of currents curves' harmonicity is observed, when currents are leaking from DG sources.**

Keywords—railroads power supply systems, distributed generation plants, emergency modes

I. INTRODUCTION

In present-day conditions, electrical power (EP) consumers can create effective distributed generation (DG) plants, which are competing with centralized EP generation [1–11]. Along with DG plants of private use, they can be organized into micro power systems. Distributed generation technology implementation entails mandatory adaptation to the market conditions, and toughening of environmental regulations encouraging the use of renewable energy sources.

DG plants can be connected to electrical power systems (EPS) using DC links, based on power electronics elements. This allows to ensure high power quality and power supply reliability, and to limit the short circuit (SC) power on the DG sources buses. Besides, when DG plants are combined into micro power systems (microgrids), possibilities are opened for modes optimization with view to power efficiency.

However, the appearance of additional power sources can lead to the short circuit currents growth in power consumers networks. Therefore, the task of emergency modes adequate modeling in power supply systems which are caused by short circuits, acquires a special urgency in conditions of DG plants commissioning.

The article presents emergency modes modeling in microgrids designed for power supply of AC railroads non-traction consumers.

II. MODELING METHODS

The was conducted in MATLAB with respect to other structural diagram, provided in fig.1. An individual power supply region of non-traction consumers was simulated with total power 2.6 MVA connected to a traction substation with DC link and including the following DG plants: turbogenerator of mini-cogeneration plant with power 3.125 MVA and voltage 6 kV; hydrogenerator of micro-hydropower plant with power 0.25 MVA and voltage 0.4 kV; wind power generation plant (WPGP) based on DC synchronous machine with power 200 kW and a solar power plant (SPP) with power 107.5 kW; in this case, SPP and WPGP based on DC machine operate using the common inverter on 0.4 kV buses, while WPGP based on the synchronous machine, is connected through the transformer and rectifier to the DC link. The main load of power supply region is concentrated on 6 kV buses. DG plants operating on

renewable energy sources are connected with 6kV network via the transformer.

Turbogenerator, actuated by a steam turbine with intermediate steam bleeding, was modeled using a standard unit of SymPowerSystems library of MATLAB system – Synchronous Machine. The steam turbine structural diagram is provided in fig. 2. The following turbogenerator parameters were used for modeling: X_d = 2.34 p.u., E_q = 1.25 p.u., U_g = 1 p.u., T_{je} = 8.669 s, δ = 46.9 el. deg.

A first-order aperiodic link model with a coefficient k_e, a time constant T_e and a voltage limiting unit [12] was used for a thyristor exciter. The following parameter values were assumed for modeling: $k_e = 1$; $T_e = 0.025$ s.

Generator actuated by the steam turbine was modeled by the standard Synchronous Machine unit. The hydroturbine structural diagram is provided in fig. 3a. The model consists of the main servomotor, whose structural diagram is shown in fig.3b. Activation function, $\frac{1}{T_s s+1}$ characteristic of hydroturbines controllers, corresponds to servomotor which is applied proportional-plus-integral feedback. The time constant of the servomotor was assumed equal to 0.25 s. The proportional-plus-integral controller was modeled by the following transfer function:

$$W(s) = \frac{nu \cdot T_i s}{T_i s + 1},$$

where *nu* – amplification factor of the proportional plus-integral device (was assumed equal to 10 p.u. when modeling); T_i – the proportional plus-integral device time constant; it was assumed equal to 0.1 s when modeling.

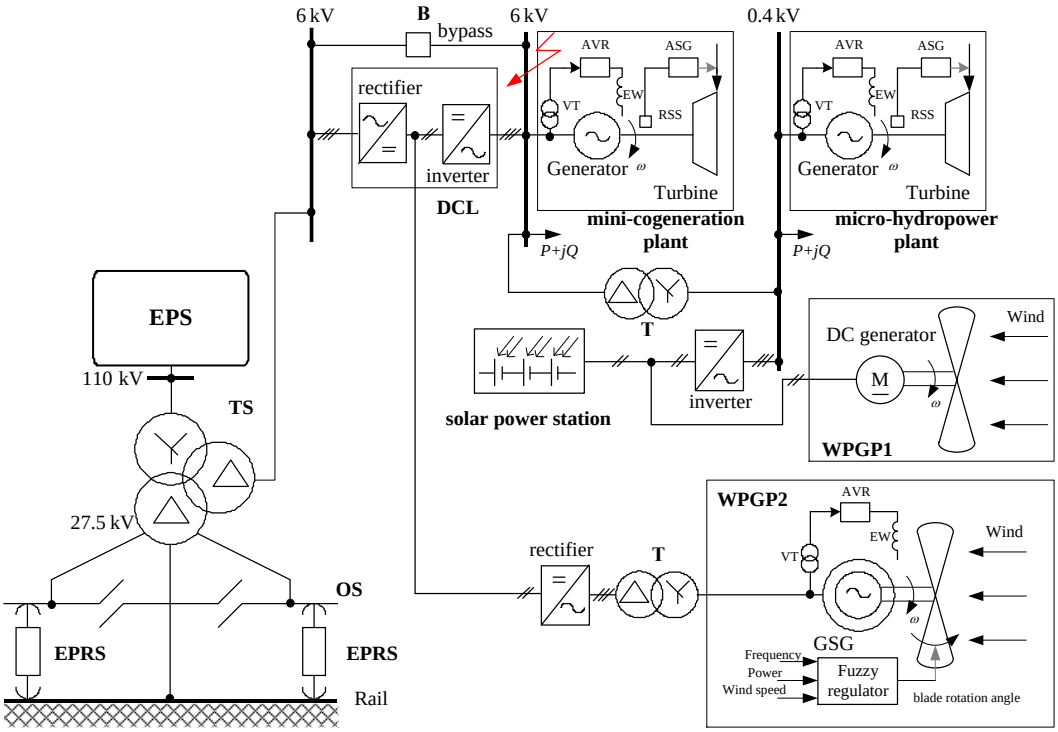

Fig. 1. A fragment of power supply system equipped with DG plants: EPS – electric power system; AVR – automatic voltage regulator; ASG – automatic speed governor; GSG – gearless synchronous generator; B – breaker; WPGP – wind power generation plant; DCL – DC link; RSS – rotational speed sensor; OS – overhead system; EW – excitation winding; T – transformer; VT – voltage transformer; TS – traction substation; EPRS – electrically-powered rolling stock.

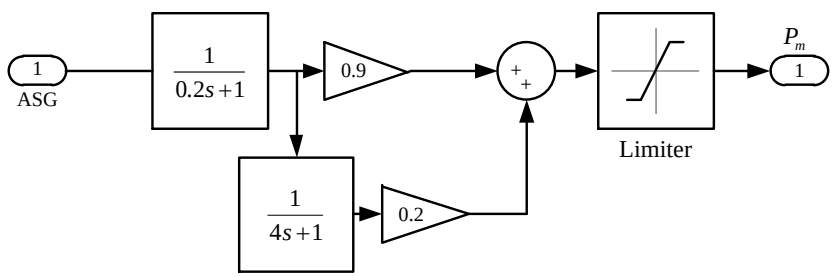

Fig. 2. Structural diagram of a steam turbine with provision for intermediate steam bleeding.

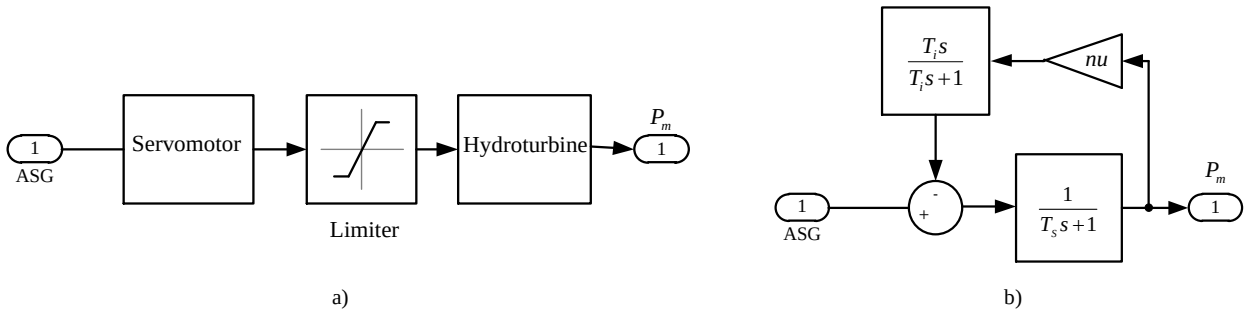

a) b)

Fig. 3. Structural diagram of hydroturbine model (a) and the main servomotor (b) in MATLAB.

Hydraulic turbine was modeled by the activation function providing for hydraulic shock possibility [13]:

$$W_T(s) = \frac{1 - a_g T_H s}{1 + 0.5 a_g T_H s},$$

where T_H – hydroturbine time constant (was assumed equal to 0.344 s when modeling); a_g – position of wicket gate opening (assumes values within the range 0…1). The following hydrogenerator parameters were used for modeling: $X_d = 2.84$ p.u., $E_q = 1.1$ p.u., $U_g = 1$ p.u., $T_{je} = 3.779$ s, $\delta = 37.5$ el. deg.

Unit designated as WPGP1 in fig.1 was modeled using standard elements of SymPowerSystems library from MATLAB system: Wind turbines and DC machines with independent excitation. Diagram of WPGP model in MATLAB system is provided in fig. 4.

The model of the solar power plant is implemented while using the PV Array unit of the MATLAB system, built on the basis of 100 parallel and 10 consecutive photoelectric modules connected with each other. Diagram of the solar power plant model is represented in fig. 5a. Basic circuit diagram of a separate unit is provided in fig. 5b.

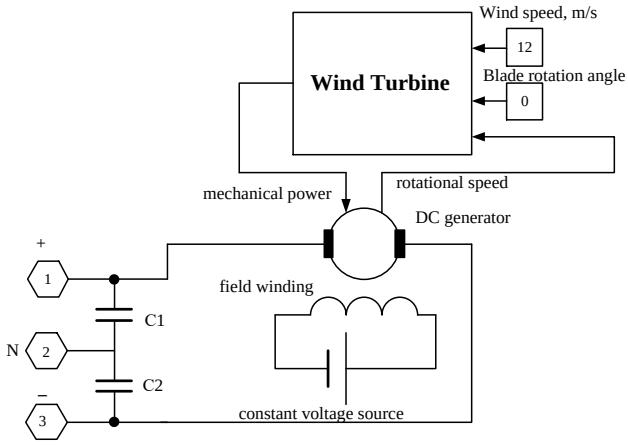

Fig. 4. WPGP model diagram.

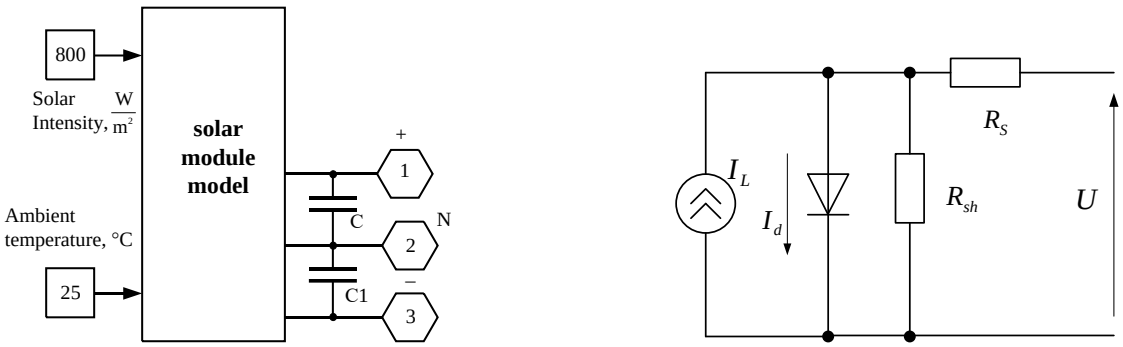

a) b)

Fig. 5. The diagram of the solar power plant (a) model and a basic circuit diagram of photoelectric module (b).

DC link ensuring DG plant communication with traction power supply system was modeled using standard units of power electronics library from SymPowerSystems package. DCL allows to enhance power quality, render consumer character of steady supply to power supply process, and provides short circuit currents limitation, as it is shown below.

Descriptions of automatic voltage regulators (AVR) used for modeling and automatic speed governor (ASG) of mini-cogeneration plant and micro-hydropower plant generators, and WPGP fuzzy power controller based on synchronous machine are given in work [14]. Regulators settings optimization was not performed when modeling, but technology of look-ahead algorithms was used [15–19].

III. The Modeling Results

When modeling, two-phase SC modes on 6 kV buses of the power supply region's main-distribution center were considered for the following DG plants operation options (ref. to fig.1):

1. Mode 1: DG plants and DCL are turned off, bypass is turned on.

2. Mode 2: mini cogeneration plant and bypass are turned on, DCL is turned off.

3. Mode 3: mini cogeneration plant and DCL are turned on.

4. Mode 4: DCL, mini cogeneration plant, micro-hydropower plant, solar power plant and WPGP1 are turned on.

5. Mode 5: DCL and all DG plants are turned on.

Mini cogeneration plant and micro-hydropower plant generators were equipped with look-ahead AVR and ASG [19]. Fuzzy controller [14] was used for WPGP2.

Modeling results of emergency mode (EM) for mode 2, 3 and 5 are shown in fig. 6, 7, 8, 9, 10, and 11. Summary modeling results for all studied modes are provided in table 1.

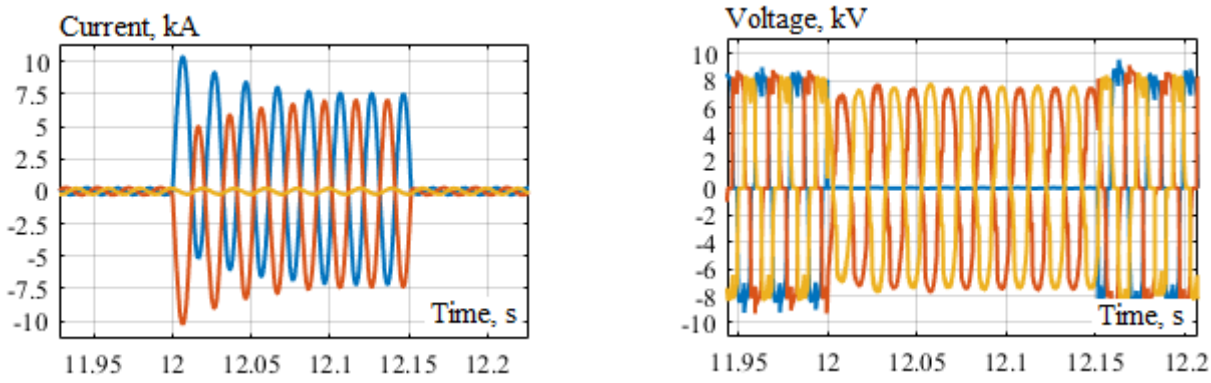

a) b)

Fig. 6. Currents (a) and voltages (b) oscillograms on non-traction consumers buses for two-phase SC for mode 2.

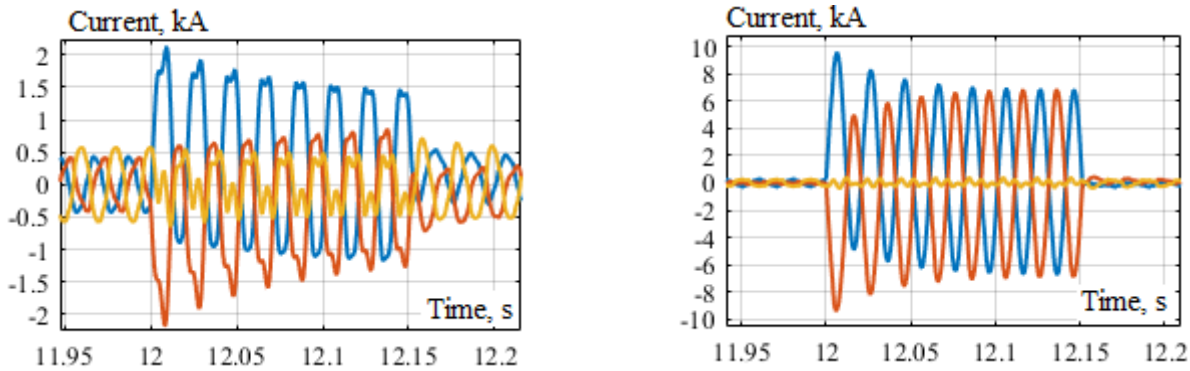

a) from mini cogeneration plant b) from TS

Fig. 7. Currents oscillograms for two-phase SC for mode 2

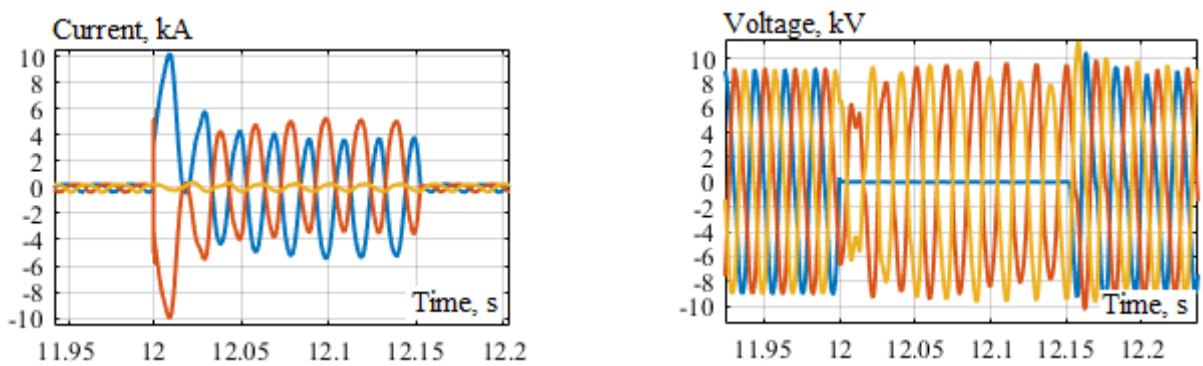

a) b)

Fig. 8. Currents (a) and voltages (b) oscillograms on non-traction consumers buses for two-phase SC for mode 3.

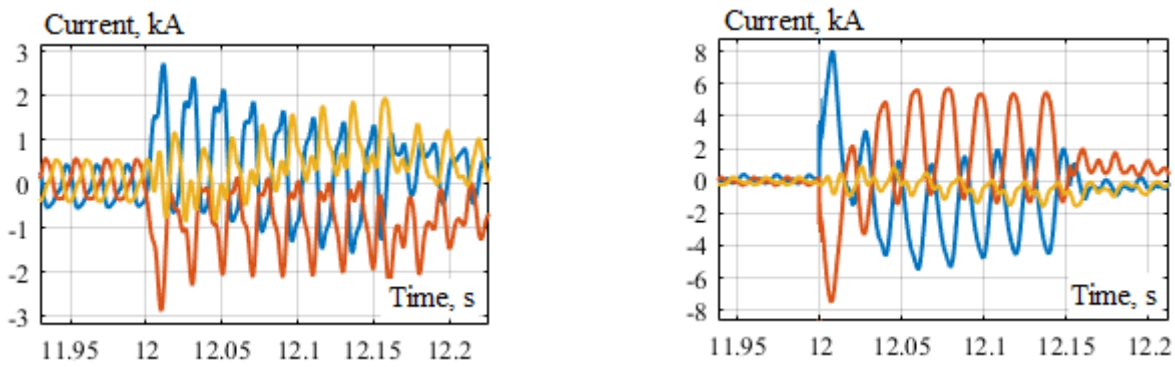

a) from mini cogeneration plant b) from TS (DCL)

Fig. 9. Currents oscillograms for two-phase SC for mode 3

TABLE I. SUMMARY TABLE OF TWO-PHASE SC CURRENTS ON 6 KV BUSES OF A NON-TRACTION CONSUMER

Operation mode	**Currents directions**	**Surge current, kA**			**Periodical current at the initial time (actual value), kA**		
		i_A	i_B	i_C	I_A	I_B	I_C
1.	Currents in SC spot	9.43	9.24	0.28	5.64	5.52	0.2
2.	Currents in SC spot	11.36	11.2	0.81	6.90	6.8	0.5
	Mini-cogeneration plant currents	2.09	1.97	0.27	1.33	1.21	0.19
	TS currents	9.57	9.46	0.68	5.63	5.61	0.36
3.	Currents in SC spot	9.88	9.69	0.2	6.2	6.15	0.18
	Mini-cogeneration plant currents	2.55	2.52	2.42	1.67	1.25	1.26
	TS (DCL) currents	7.94	7.17	2.64	4.95	5.03	1.33
4.	Currents in SC spot	10.11	9.93	0.46	6.33	6.28	0.24
	Mini-cogeneration plant currents	2.54	2.49	0.64	1.4	1.24	0.5
	TS (DCL) currents	7.97	7.17	0.93	5.01	4.95	1.41
	Currents of micro-hydropower plant, solar power plant and WPGP1 on 6 kV side	0.31	0.29	0.12	0.16	0.15	0.06
5.	Currents in SC spot	11.0	10.8	0.36	7.08	7.03	0.17
	Mini-cogeneration plant currents	2.66	2.65	0.83	1.49	1.38	0.66
	TS (DCL) currents	8.55	7.98	0.97	5.61	5.47	0.71
	Currents of micro-hydropower plant, solar power plant and WPGP1 on 6 kV side	0.30	0.30	0.16	0.15	0.15	0.07

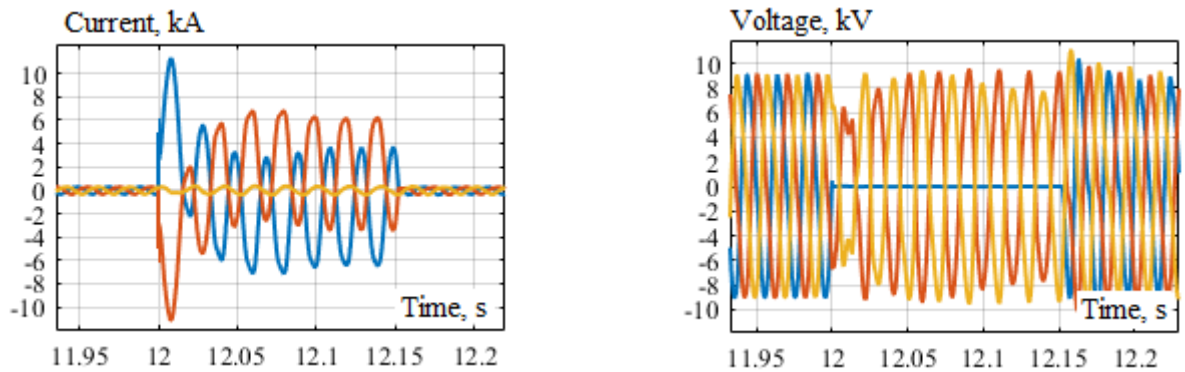

a) b)

Fig. 10. Currents (a) and voltages (b) oscillograms on non-traction consumers buses for two-phase SC for mode 5.

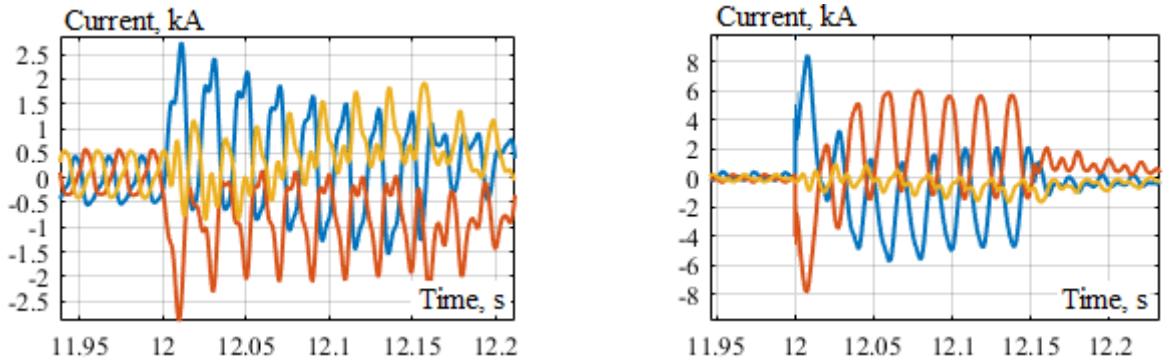

a) from mini cogeneration plant

b) from TS (DCL)

Fig. 11. Currents oscillograms for two-phase SC for mode 5

IV. Conclusion

Analysis of the results obtained allows making the following inferences:

1. When using distributed generation plants, short circuit currents are growing which requires additional examination of the switching equipment and modification of relay protection installations to ensure selectivity.

2. The use of DC link allows to significantly limit currents in damaged phases, even in conditions of feeding from DG plants. Therefore, using rectifier-inverter group is an effective way to limit SC currents.

3. In case of two-phase short circuit, a considerable distortion in current curves leaking from DG plants is observed. This is explained by the fact that in case of currents unsymmetry, synchronous generators start generating higher harmonics in the network; in this case, the most serious distortions are observed in the undamaged phase.

References

[1] N. Rugthaicharoencheep, S. Auchariyamet, “Technical and Economic Impacts of Distributed Generation on Distribution System”, International Journal of Electrical, Computer, Energetic, Electronic and Communication Engineering, vol.6, No.4, pp. 385-389, 2012.

[2] T. Ackermann, G. Anderson, L. Söder, “Distributed generation: a definition”, Electric Power Systems Research, No.57, pp. 195-204, 2001.

[3] Ph. P. Barker, R.W. De Mello, “Determining the Impact of Distributed Generation on Power Systems: Part 1 - Radial Distribution Systems”, 2000 IEEE PES Summer Meeting, Seattle, WA, USA, pp.222-233, July 11-15 2000.

[4] N.I. Voropai, Z.A. Stychinsky, Renewable energy sources: theoretical foundations, technologies, technical characteristics, economics, Magdeburg: Otto-von-Guericke-Universität, 2010, 223 p.

[5] J. Wang, A.Q. Huang, W. Sung, Y. Liu, B.J. Baliga, “Smart Grid Technologies”, IEEE Industrial Electronics Magazine, vol. 3, No 2, pp. 16-23, 2009.

[6] F.N. Mohsen, M.S. Amin, H. Hashim, “Application of smart power grid in developing countries”, IEEE 7th International Power Engineering and Optimization Conference (PEOCO), 2013. DOI: 10.1109/PEOCO.2013.6564586

[7] O. Ellabban, H. Abu-Rub, F. Blaabjerg, “Renewable energy resources: Current status, future prospects and their enabling technology”, Renewable and Sustainable Energy Reviews, vol. 39, pp. 748-764, 2014.

[8] B.M. Buchholz, Z.A. Styczynski, Smart Grids – Fundamentals and Technologies in Electricity Networks, Berlin Heidelberg: Springer-Verlag, 2014, 396 p.

[9] K. Suslov, N. Solonina, V. Stepanov, “A principle of power quality control in the intelligent distribution networks”, International symposium on smart electric distribution systems and technologies EDST 2015, Proceedings, pp. 260-264, 2015.

[10] E.A.Martínez Ceseña, T. Capuder, P. Mancarella, “Flexible distributed multienergy generation system expansion planning under uncertainty”, IEEE Transaction on Smart Grid, vol. 7, pp. 348-357, 2016.

[11] Magdi S. Mahmoud, Fouad M. AL-Sunni, Control and Optimization of Distributed Generation Systems. Cham: Springer International Publishing: Imprint: Springer, 2015, 578 p.

[12] P.M. Anderson, A.A. Fouad, Power System Control and Stability. Second Edition. IEEE Press, 2003, 688 p.

[13] L.D. Sterninson, Transient phenomena in case of regulation of frequency and power in power supply systems, Moscow, Energy, 1975, 216 p. (in Russian)

[14] Yu.N. Bulatov, “Intelligent control systems for distributed generation plants”, Proceedings of Irkutsk State Technical University, vol. 21, No.10, pp. 78–94, 2017 (in Russian) DOI: 10.21285/1814-3520-2017-10-78-94.

[15] E.F. Camacho, C. Bordons, Model Predictive Control, 2nd edition Springer, 2007, p. 405.

[16] G.A. Pikina, M.S. Kuznecov, “Application of the linear prognostic algorithms of regulation”, New in the Russian power industry, No. 10, pp. 40-44, 2009 (in Russian).

[17] I.S. Durgaryan, F.F. Pashchenko, G.A. Pikina, A.F. Pashchenko, “Information method of consistent identification of objects”, Proceedings of the 2013 IEEE 8th Conference on Industrial Electronics and Applications, ICIEA 2013, pp. 1325-1330.

[18] A. Pikina, "The principle of control according to the forecast and the possibility of adjusting the regulation systems by one parameter", New in the Russian electric power industry, No.3, pp.5-13, 2014 (in Russian).

[19] Yu.N. Bulatov, A.V. Kryukov, N.V. Huan, “Automatic Prognostic Regulators of Distributed Generators”, 2018 International Multi-Conference on Industrial Engineering and Modern Technologies (FarFastCon), IEEE Conference Publications, pp. 1-4. DOI: 10.1109/FarEastCon.2018.8602718