ATLANTIS PRESS

Advances in Social Science, Education and Humanities Research, volume 410

1st International Multidisciplinary Conference on Education, Technology, and Engineering (IMCETE 2019)

The Design and the Implementation of Security System Office Door Using Raspberry Pi Face Detection

1st T H Iwan
Fakultas Sains dan Teknologi, Magister Teknik Informatika
Universitas Raharja
Tangerang, Indonesia
tanto.harsono@raharja.com

2nd H M Fahrezy
Fakultas Sains dan Teknologi, Magister Teknik Informatika
Universitas Raharja
Tangerang, Indonesia

3rd R P Merliasari
Fakultas Sains dan Teknologi, Magister Teknik Informatika
Universitas Raharja
Tangerang, Indonesia

***Abstract*—The office door is the main access to enter the office in a company. Currently the office door generally still uses the key to be able to unlock the office door that has weak security. The authors will make the office door that integrated by a computer system that can unlock the office door using the registered faces in the system. The series of these tools use the camera to take a picture of the face and then sent it to the raspberry pi as the brain or the process tool to verification face, which will turn the face image into data information and make the decision to take action. After that solenoid will open after receiving the appropriate data from the raspberry pi. This tool becomes essential in helping employees to unlock the office door, so no need difficult to find the key to unlock the office door.**

Keywords: security system, office door, detection face, raspberry pi

I. INTRODUCTION

In this modern era, the advancement of technology in computer and electronics is very developing, so there are many technologies in the field of technology that can be felt by the community, such as to facilitate and accelerate all sorts of jobs in Industry, education, government and so forth because it provides considerable benefits in all aspects of human life. This can be seen from the manufacture of intelligent and controlled robots that are the demands of the modern industrial world that demands a high-capability tool to complete the work of the human with maximum results.

At this time, to open or lock the door is still done manually in various agencies as in CV. Cucu Plastic so it requires a technology to open and lock the door that is currently done manually. Besides, you can monitor anyone who can enter the office space.

Responding to the above problems, this research makes use of electronic media, so it is created tools to design and implement a type of technology with the title of SECURITY SYSTEM OFFICE DOOR USE DETECTION FACE WITH RASPBERRY PI Research is expected to increase the safety of office space.

A face recognition system is a computer application to automatically identify or verify someone from a digital image or video frame from a video source [1].

II. RESEARCH METHODOLOGY

In this research the author conducted several methods of research, namely:

- Data Collection Methods
  In the collection of data, authors do several methods, namely the observation method (direct observation) which does the review of the space directly on a CV. CUCU PLASTIC to obtain the data needed and also to record the data Needed systematically. The next method is the interview, which is the method of data collection by conducting interviews directly to face with face to Mr. Iwan, as the chairman of the company as a source. In addition to the two methods above the authors do a method of library study is to collect data from several legitimate sources and learn the elements that are being researched.
- Analysis method
  Analysis of the problem contains a discussion of problems in the office area. From the analysis that has been done can be concluded that the security office door is still low.
- Planning method
  In this design method, we can know how the system was created or designed and what tools are needed. Through the stage of creating a flowchart as a groove of the system that will be created and hardware design in the form of the overall schematic. The author also undertook testing methods with hardware testing and Blackbox testing. The reason for using Blackbox testing is to be analyzed and also evaluate the results of the tests done on the system.

III. LITERATURE REVIEW

In this study the author searched for several references (literature review) to the research that was previously done:

- The research was done by Aditya Rahman (2011) under the title "Facial recognition system using webcams for attendance with template matching method". This study discusses face detection systems with input in the form of digital images of faces. This system will generate a

sub-image containing a successfully detected face. So the final image can be used for attendance.[2]

- Research done by Agus Kurniawan (2011) under the title "Application of Face identification based attendance using methods Gabor Wavelet" This research discusses the results of the school attendance system with a face that can note Students ' presence in an absolute, effective and efficient manner thus reducing the level of fraud in the attendance list, as the students in question must come to the learning place directly. [3]
- Research is done by Mohammad Arif Dwi Cahyo (2014) under the title "Design prototype Smart Voice Device door room using Raspberry Pi at Raharja College". This research aims to make the prototype of the door using voice command, this tool uses the Voice SI user as access to open and close the door of the room. [4]
- Research conducted by Setya Bayu, DKK (2011) under the title "Implementation of Face Recognition with Eigenface method in Intelligent Home Security". This research aims to be able to recognize the faces of homeowners and foreigners. The introduction of human faces in visual imagery can be implemented into many applications that include facial recognition using the Eigenface method. The concept of Eigenface is a series of eigenvectors used to recognize human faces in a computer vision. [5]

IV. Results and Discussion

A. Face Recognition System

The Face Recognition System is implemented in the Microsoft-based process by Microsoft server. The way face recognition works uses the Eigenface Methode. Eigenface is an easy-to-implement face detection algorithm.

To be able to detect faces in need of facial landmarks, that is a series of detailed special points about the face, such as mouth, nose, and eyes. In general, there are 27 points of landmark faces that have been set. 6

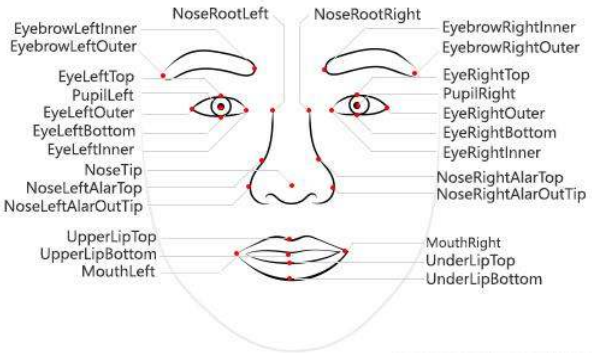

Figure 1. Landmark face [2]

B. How facial recognition Works

To get the value of the landmark face using the Landmark chart face that is in the process by Microsoft.

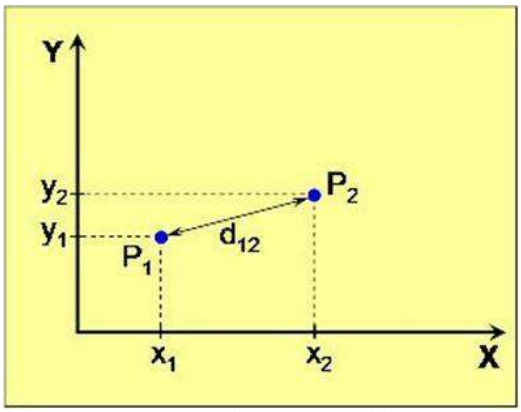

Figure 2. Coordinates Landmark face

The results have been in progress by the server to get the landmarks:

Figure 3. Landmark Face

TABLE 1. RESULTS LANDMARK FACE

No.	Landmark Weight	X	Y	No.	Landmark Weight	X	Y
1	"eyeRight": {	[illegible]	[illegible]	1	"eyeRight": {	[illegible]	[illegible]
2	"eyeRight": {	[illegible]	[illegible]	2	"eyeRight": {	[illegible]	[illegible]
3	"nose": {	[illegible]	[illegible]	3	"nose": {	[illegible]	[illegible]
4	"nose": {	[illegible]	[illegible]	4	"nose": {	[illegible]	[illegible]
5	"nose": {	[illegible]	[illegible]	5	"nose": {	[illegible]	[illegible]
6	"eyebrowLeftOuter": {	[illegible]	[illegible]	6	"eyebrowLeftOuter": {	[illegible]	[illegible]
7	"eyebrowLeftOuter": {	[illegible]	[illegible]	7	"eyebrowLeftOuter": {	[illegible]	[illegible]
8	"eyeLeftOuter": {	[illegible]	[illegible]	8	"eyeLeftOuter": {	[illegible]	[illegible]
9	"eyeLeftTop": {	[illegible]	[illegible]	9	"eyeLeftTop": {	[illegible]	[illegible]
10	"eyeLeftBottom": {	[illegible]	[illegible]	10	"eyeLeftBottom": {	[illegible]	[illegible]
11	"eyeLeftInner": {	[illegible]	[illegible]	11	"eyeLeftInner": {	[illegible]	[illegible]
12	"eyebrowRightInner": {	[illegible]	[illegible]	12	"eyebrowRightInner": {	[illegible]	[illegible]
13	"eyebrowRightOuter": {	[illegible]	[illegible]	13	"eyebrowRightOuter": {	[illegible]	[illegible]
14	"eyeRightInner": {	[illegible]	[illegible]	14	"eyeRightInner": {	[illegible]	[illegible]
15	"eyeRightTop": {	[illegible]	[illegible]	15	"eyeRightTop": {	[illegible]	[illegible]
16	"eyeRightBottom": {	[illegible]	[illegible]	16	"eyeRightBottom": {	[illegible]	[illegible]
17	"eyeRightOuter": {	[illegible]	[illegible]	17	"eyeRightOuter": {	[illegible]	[illegible]
18	"noseRootLeft": {	[illegible]	[illegible]	18	"noseRootLeft": {	[illegible]	[illegible]
19	"noseRootRight": {	[illegible]	[illegible]	19	"noseRootRight": {	[illegible]	[illegible]
20	"noseLeftAlarTop": {	[illegible]	[illegible]	20	"noseLeftAlarTop": {	[illegible]	[illegible]
21	"noseRightAlarTop": {	[illegible]	[illegible]	21	"noseRightAlarTop": {	[illegible]	[illegible]
22	"noseLeftAlarOutTip": {	[illegible]	[illegible]	22	"noseLeftAlarOutTip": {	[illegible]	[illegible]
23	"noseRightAlarOutTip": {	[illegible]	[illegible]	23	"noseRightAlarOutTip": {	[illegible]	[illegible]
24	"upperLipTop": {	[illegible]	[illegible]	24	"upperLipTop": {	[illegible]	[illegible]
25	"upperLipBottom": {	[illegible]	[illegible]	25	"upperLipBottom": {	[illegible]	[illegible]
26	"mouthLeft": {	[illegible]	[illegible]	26	"mouthLeft": {	[illegible]	[illegible]
27	"mouthRight": {	[illegible]	[illegible]	27	"mouthRight": {	[illegible]	[illegible]

After manding the value of the landmark to be able to do Face Verification first should be the host of centerOfTwoEyes and centerOfMouth values both images by using the formula:

TABLE 2. FORMULA CENTEROFTWOEYES AND NTEROFMOUTH

$$\text{centerOfTwoEyes} = \frac{eyeLeftInner\ X + eyeRightInner\ X}{2} + \frac{eyeLeftInner\ Y + eyeRightInner\ Y}{2}$$

$$\text{centerOfMouth} = \frac{upeperLipBottom\ X + UnderLipTop\ X}{2} + \frac{upeperLipBottom\ Y + UnderLipTop\ Y}{2}$$

TABLE 3. FORMULA CENTEROFTWOEYES AND ENTEROFMOUTH

centerOfTwoEyes f1 =	$X = \frac{755.7 + 1080.5}{2} = 918.8$	$Y = \frac{1294 + 130}{2} = 1297.0$
centerOfMouth f1 =	$X = \frac{925.9 + 921.7}{2} = 923.8$	$Y = \frac{1826.4 + 18}{2} = 1849.05$
centerOfTwoEyes f2 =	$X = \frac{804.1 + 1122.1}{2} = 963.1$	$Y = \frac{1223.2 + 12}{2} = 1220.9$
centerOfMouth f2 =	$X = \frac{981.5 + 985.3}{2} = 983.4$	$Y = \frac{1732.1 + 17}{2} = 1733.65$

After the centerOfTwoEyes and centerOfMouth values are already in the can next be summing up the total landmark points of face 1 and face 2 with the formula of total landmark points:

$$f = centerofmouth + centeroftwoeyes + (27\ landmark\ x + y) \quad (1)$$

TABLE 4. TOTAL LANDMARK POINT

F1

No.	Landmark Point	X	Y
1	[illegible]	[illegible]	[illegible]
2	[illegible]	[illegible]	[illegible]
3	[illegible]	[illegible]	[illegible]
4	[illegible]	[illegible]	[illegible]
5	[illegible]	[illegible]	[illegible]
6	[illegible]	[illegible]	[illegible]
7	[illegible]	[illegible]	[illegible]
8	[illegible]	[illegible]	[illegible]
9	[illegible]	[illegible]	[illegible]
10	[illegible]	[illegible]	[illegible]
11	[illegible]	[illegible]	[illegible]
12	[illegible]	[illegible]	[illegible]
13	[illegible]	[illegible]	[illegible]
14	[illegible]	[illegible]	[illegible]
15	[illegible]	[illegible]	[illegible]
16	[illegible]	[illegible]	[illegible]
17	[illegible]	[illegible]	[illegible]
18	[illegible]	[illegible]	[illegible]
19	[illegible]	[illegible]	[illegible]
20	[illegible]	[illegible]	[illegible]
21	[illegible]	[illegible]	[illegible]
22	[illegible]	[illegible]	[illegible]
23	[illegible]	[illegible]	[illegible]
24	[illegible]	[illegible]	[illegible]
25	[illegible]	[illegible]	[illegible]
26	[illegible]	[illegible]	[illegible]
27	[illegible]	[illegible]	[illegible]
28	[illegible]	[illegible]	[illegible]
29	[illegible]	[illegible]	[illegible]
30	[illegible]	[illegible]	[illegible]
Total		[illegible]	

F2

No.	Landmark Point	X	Y
1	[illegible]	[illegible]	[illegible]
2	[illegible]	[illegible]	[illegible]
3	[illegible]	[illegible]	[illegible]
4	[illegible]	[illegible]	[illegible]
5	[illegible]	[illegible]	[illegible]
6	[illegible]	[illegible]	[illegible]
7	[illegible]	[illegible]	[illegible]
8	[illegible]	[illegible]	[illegible]
9	[illegible]	[illegible]	[illegible]
10	[illegible]	[illegible]	[illegible]
11	[illegible]	[illegible]	[illegible]
12	[illegible]	[illegible]	[illegible]
13	[illegible]	[illegible]	[illegible]
14	[illegible]	[illegible]	[illegible]
15	[illegible]	[illegible]	[illegible]
16	[illegible]	[illegible]	[illegible]
17	[illegible]	[illegible]	[illegible]
18	[illegible]	[illegible]	[illegible]
19	[illegible]	[illegible]	[illegible]
20	[illegible]	[illegible]	[illegible]
21	[illegible]	[illegible]	[illegible]
22	[illegible]	[illegible]	[illegible]
23	[illegible]	[illegible]	[illegible]
24	[illegible]	[illegible]	[illegible]
25	[illegible]	[illegible]	[illegible]
26	[illegible]	[illegible]	[illegible]
27	[illegible]	[illegible]	[illegible]
28	[illegible]	[illegible]	[illegible]
29	[illegible]	[illegible]	[illegible]
30	[illegible]	[illegible]	[illegible]
Total		[illegible]	

After getting the total value of landmarks from F1 and the new F2 can be verified the F1 face is the same as the face F2 by using the face verification formula:

$$Face\ Varification\ (\%) = \left(\left(\frac{(f1 - f2)}{f1}\right) \times -100\right) + 100$$

Figure 4. Formula face verification

$$\boldsymbol{Face\ Varification}\ (\%) = \left(\left(\frac{(69210.55 - 67820.45)}{69210.55}\right)\right.$$

Figure 5. Result face verification

The result is a percentage of 98% match between F1 and F2.

$$True = 60\% < 100\%$$

$$False = 0\% < 59.9\%$$

And it can be concluded that the face 1 (F1) with face 2 (F2) is the same person. From these results, Microsoft gave a digital signal to Raspberry Pi to unlock the door because of the results that can be True, if the results can be False then the Raspberry Pi will not open the door lock.

C. *Proposed flowcharts*

Here is a flowchart of the office door security system using face detection with the proposed Raspberry pi in figure 6.

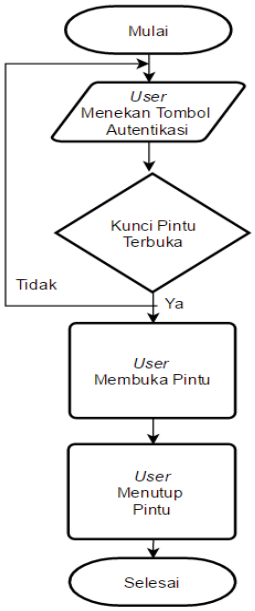

Figure 6. Office door safety flowchart using face detection with the PI Raspberry

Figure 6. can be described. The flowchart of the Office door security system using face detection with Raspberry Pi above is consist of:

- 2 (two) terminal symbols, which serve as "start" and "Finish" in the flowchart process flow of information delivery system running.
- 1 (one) data symbol stating the input process, namely: User pressed the authentication key.
- 2 (two) process symbol that states the user opens and closes the door.
- 1 (one) decision symbol, which serves to show a decision making step if "yes" and "no", that is: Is the result of authentication on the photo correct? If "Yes" the user opens the door. If "No" the user presses the authentication key again.

D. *Tool Design*

The office door security system uses face detection with the Raspberry Pi, in which the design of the tool is composed of the original resembles. This tool is equipped with components such as Raspberry Pi, Camera, Solenoid Door, Relay, Button, Power Adapter 12v, Power Adapter 5v. Door material made of wood as a miniature door.

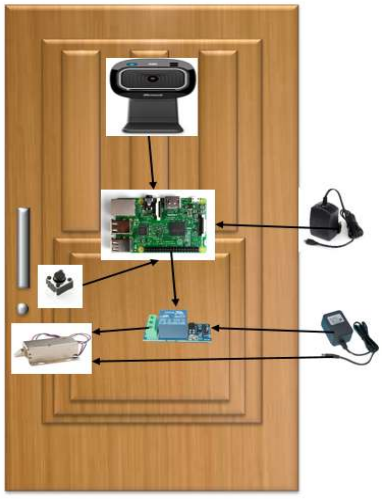

Figure 7. Tool Design

1) Block diagrams

Here's a block of diagrams and workflows for the Office system security system using facial detection using Raspberry Pi in Figure 7.

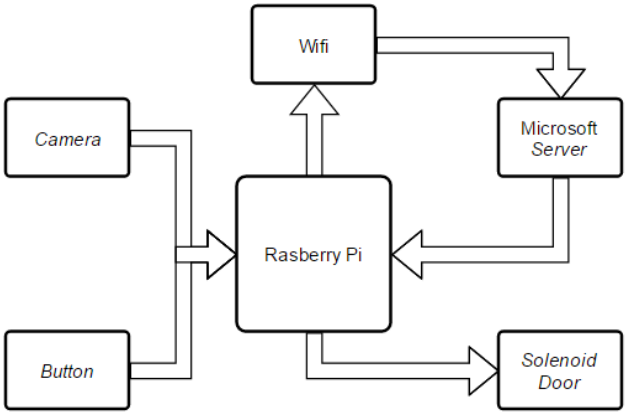

Figure 8. Block Office security system Diagram using face Detection

Description:

- The camera is a device that is used to capture images of users who want to open the door.
- The button serves to communicate with the tool.
- Raspberry Pi processes data already obtained by Camera.
- Wifi serves as a communication tool between Raspberry Pi and the Internet.
- The Microsoft server processes and authenticates images that will output in the form of digital signals to the Raspberry Pi.
- Solenoid Door is useful for locking and unlocking depending on the signal that is given Raspberry Pi.

The way the Office System Security Tool works using face detection with this pi Raspberry can be divided into 3 (three) parts. The first part is the input system, where the system is the initial step of the tool work, then the processing system that works to process the signal that has been received from the input system to be issued in the third part is the output system.

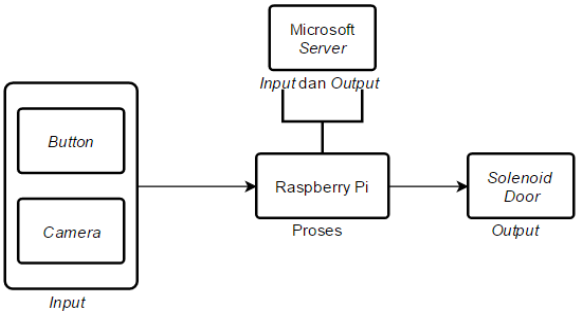

Figure 9. How the tool works

- Input system

  In the input system, there are 3 inputs, namely, Button, Camera, and Microsoft server. The Button itself is useful for users who want to open the door. The Camera itself is useful for capture images that will be in the process of Raspberry Pi. The Microsoft server receives inputs from the image that is sent in Raspberry Pi.
- Process System

  In this process system use Rasberry Pi which is the brains of all inputs in charge of processing the data emit the output of the input received based on the program that has been saved.
- Output system

  2 outputs are issued namely Microsoft Server and Solenoid Door. Microsoft Server processes the image and delivers the output of a digital signal to the Raspberry Pi that is forward to the Solenoid Door to unlock the door.

Testing Black Box

No.	Skenario Pengujian	Tes Case	Hasil yang Diterapkan	Hasil Pengujian	Kesimpulan
1.	Menekan tombol verifikasi untuk membuka pintu dengan satu wajah yang sudah terdaftarkan di *whitelist visitor*		Pintu terbuka karena wajah sudah terdaftar dan dapat di kenali oleh sistem		*Valid*
2.	Menekan tombol verifikasi untuk membuka pintu dengan satu wajah yang tidak terdaftarkan di *whitelist visitor*		Pintu tidak terbuka karena wajah tidak dikenali oleh sistem.		*Invalid*
3.	Mencoba membuka pintu dengan satu wajah terdaftar tapi dengan satu mata tertutup		Pintu terbuka karena wajah sudah terdaftar dan masih dapat di kenali oleh sistem		*Valid*
4.	Mencoba membuka pintu dengan satu wajah terdaftar tapi dengan dua mata tertutup		Pintu tidak terbuka karena wajah tidak dikenali oleh sistem.		*Invalid*
5.	Mencoba membuka pintu dengan dua wajah berbeda, satu terdaftar dan satuyah tidak.		Pintu terbuka karena salah satu wajah sudah terdaftar dan masih dapat di kenali oleh sistem		*Valid*

Table 5. Testing Black Box

V. CONCLUSION

From the design and implementation of the security system office door using detection face with the Raspberry pi. The granddaughter of plastic can be taken several conclusions, among others:

- The tool can unlock doors with faces already registered in the system and can automatically lock the door back 10 seconds after the key is open.
- Office doors become safer because only the faces of office employees who are already registered in the system can unlock the office door locks.
- More simple and easy to open the office door locks no longer need a key child to open the office door just by pressing the verification button and the face we are on the door of the camera doors office locks will open.

REFERENCES

[1] Bansal Ankur & Mukesh Agarwal, 2013. *"Facial Recognition". International Journal of Computer.*

[2] Microsoft. 2017. *Face Application Programming Interface.* From: *docs.microsoft.com.*

[3] Rahman, Mohamad Aditya. 2011. Sistem Pengenalan Wajah Menggunakan Webcam Untuk Absensi Dengan Metode Template Matching. Surabaya: Politeknik Elektronika Negeri Surabaya

[4] Kurniawan, Agus. 2011. Aplikasi Absensi Kuliah Berbasis Identifikasi Wajah Menggunakan Metode Gabor Wavelet. Surabaya: Institut Teknologi Sepuluh Nopember

[5] Dwi Cahyo, Mohammad Arif. 2014. Desain Prototipe Smart Voice Device Pintu Ruangan Menggunakan Raspberry Pi Pada Perguruan Tinggi Raharja. Tangerang: STMIK Raharja

[6] Setya Bayu, dkk. 2011. Penerapan *Face Recognition* Dengan Metode *Eigenface* Dalam *Intelligent Home Security*. Jurnal Ilmiah Dan Teknologi Surabaya: Institut Teknologi Sepuluh Nopember (ITS) Surabaya.