Designing Heat Protection Clothing for People With Reduced Mobility

Babenko L.G.* Savelieva N.Y. Kurenova S.V. Osipenko L.A.

Department of Design, Technology and Design, Institute of services industry and businesses (branch) of DGTU in Shakhty, Russia
**Corresponding author. Email: liana-babenko@mail.ru*

ABSTRACT
The article presents research on the development of heat-protective adaptation clothing with an automated system of thermal comfort control for people with reduced mobility, who move with the help of wheelchairs. Due to the paralysis of the lower limbs, people in this population are at greater risk of frostbite in the cold season. These clothes are designed to protect against negative ambient temperatures. Flexible carbon fibre plates were used as sources of additional heating. In order to control and monitor the temperature of the undercover space, an automated thermal comfort management system was developed inside the product. Temperature control is carried out by means of software on a smartphone. This type of clothing will increase the thermal and operational comfort, as well as the safety of people with disabilities in the presence of negative temperatures while increasing the time period.

Keywords: *people with reduced mobility, heat protection clothing, thermal comfort, heating elements, automated thermal comfort control system*

1. INTRODUCTION

According to research [1], the total number of people with disabilities as of 09.04.2019 is 11 million 947 thousand people. Of these, about 3 % (more than 350,000 people) are disabled due to limited mobility of various etiologies. This group of people moves by means of technical means and devices.

The priority task for the development of modern society is the integration of people with disabilities into society, which implies the process of restoration of destroyed links ensuring the inclusion of a person with disability in the main spheres of life: work, life, leisure [2].

Integration is facilitated by recovery, i.e. the implementation of various programmes, services or therapeutic interventions that help to quickly restore impaired functions [2].

An important condition for recovery is the provision of people with reduced mobility (hereinafter – PRM) with functional clothing that meets the purpose, a high degree of operational comfort and safety, as the quality of their lives largely depends on the use of comfortable, appropriate to a range of specific requirements and conditions of life [3].

The complex account of infringements of functions of an organism at people with the limited motor possibilities is the priority factor at designing of garments with function of heat and thermal protection of the person from harmful influences of environment.

It is known that wheelchair-assisted LEADs are at greater risk of overheating in hot weather and frostbite in the cold season [4].

The aim of the research is to develop heat-resistant adaptation clothing with a high degree of operational comfort and safety. A heat-protective "foot bag" type product with an automated thermal comfort control system (hereinafter referred to as ACS TK) of the undercover space was chosen as the product to be designed.

The analysis of domestic and foreign experience in designing the assortment line of heat-protective products for people with reduced mobility showed that the overwhelming majority of real analogues of clothing samples do not provide safety under the conditions of negative temperature conditions [5].

The following defects were revealed:

- products have no gender and age differences;
- the construction device in most models does not increase the self-service level for PRM;
- there is no scientifically grounded information on safe operation of heat protection products taking into account time and temperature conditions;
- thermal comfort in heat-protective adaptation clothes is created exclusively due to the use of heat-protective properties of the package of materials, which, in our opinion, can not provide a sufficiently long stay of PRM at low temperatures;
- the proposed products do not have thermal comfort assurance and control systems.

An important factor that should be taken into account when designing heat-protective adaptation products for PRM is the violation of thermoregulation, as well as the lack of objective reaction of the hypodynamic system of the lower extremities in PRM to external stimuli (negative temperatures). These factors lead to an increased risk of freezing and uncontrolled frostbite of the lower limbs.

This article presents the results of research on the development of a rational design of a heat protection product with ACS TC. Early researches [6] have developed recommendations on definition of a rational package of materials consisting of the basic material – membrane (art. 216FOR-Movement), fleece lining material and Tinsulite® insulation. Figure 1 shows the appearance of the design of the heat protection product layout.

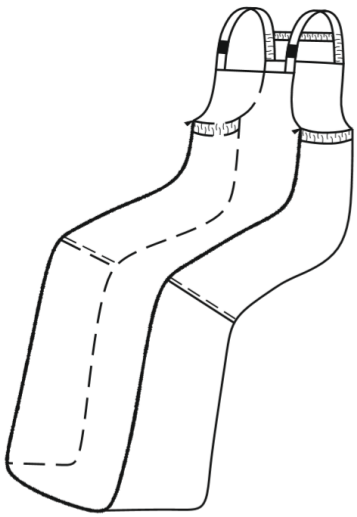

Figure 1 Layout of the design of the heat protection product

Experimental studies [5, 6] have confirmed the practical choice of LODV heat protection product with the use of Tinsulite® insulation materials in the package as a priority for their operation in conditions of negative ambient temperatures.

At the same time, the studies proved that in order to create and maintain a comfortable thermal condition of the PRM during the walk in the conditions of ambient temperature from 0 to –15 °C it is expedient to use a structural device of the heat protection product, the package of which consists of three types of materials supplemented with a local heating system.

Also, the advantages of these materials are widespread use in the manufacture of a segment of functional thermal protective clothing, low weight, plasticity, ease of use, as well as an affordable price, which is one of the priority parameters in the manufacture of clothing for a socially poorly protected group - people with reduced mobility.

2. METHODS AND MATERIALS

In order to maintain thermal comfort of PRM at negative ambient temperatures (from –2 to –15 °C) it is proposed to place flexible heating elements in the heat-protective product, namely, a triple heating flexible element [6]. It is proposed to use "Power bank" as a power source. Taking into account the contact areas of the torso and lower limbs of a person who is in the sitting position with the details and areas of the wheelchair, the maximum effect on the additional heating can be assumed to be the following: the back surface of the tibia and the lower limbs' feet. It is possible that the knee areas (outer surface) will experience the greatest degree of cooling. To solve this problem, it was proposed to place a pocket with an additional layer of insulation at the knee.

Thus, in accordance with Figure 2, the scheme of local heating system location is presented, where 1 – heating elements, 2 – cable managers for wires insulation, 3 – battery.

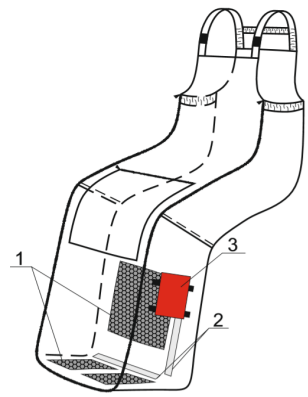

Figuee 2 Appearance of the constructive device of the heat protection product with the local heating system

An important factor when equipping a thermal protection product for PRM with heating elements is the choice of the temperature range under different environmental conditions, i.e. the burnout in the product should be regulated automatically as a reaction to changes in the given conditions.

In other words, the heating system should be safe in the process of operation and should take into account the physiological characteristics of the person with hypodynamics of the lower limbs, primarily, such as skin sensitivity disorders – reactions to external stimuli. As the person with PRM, at thermal influence on the sites of a body, deprived of adequate reaction to an irritant (for example, such disordes as paraplegia) can get a burn.

This increases the need to control the temperature of additional heating sources. To solve this problem, an algorithm of operation of the local heating system with ACS TC is developed. Softphone software has also been developed to control and monitor the desired temperature inside the product. The algorithm of ACS TC operation is recorded on the control microcontroller. With the help of Bluetooth on the smartphone, the user connects to the

heat-proof product, and sets the desired temperature inside the product in the application.

In accordance with the overall parameters of the technical components of the automatic control system of the TC and the location of the heating elements, the design device and the model design of the heat protection product for the PRM are developed, with the help of CAD "Grazia" version 330, presented in Figure 3.

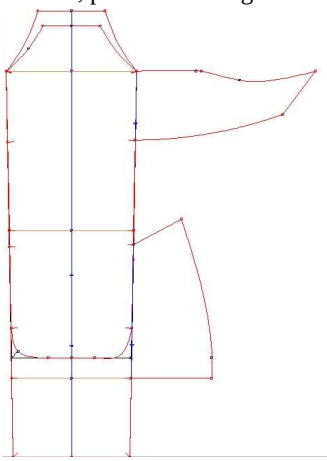

Figure 3 Drawings of the model construction of the heat protection product for PRM

The proposed design device will allow to preserve the maximum heat flow at low ambient temperatures and will allow to create and maintain a comfortable temperature of the underground space.

3. EXPERIMENTAL

Testing of a prototype of a heat-protective product with ACS TK was carried out according to the method similar to that given in [4], where the main measured parameter was the temperature of the lower limbs skin surface.

Determination of skin temperature was carried out with the use of portable digital thermometers, brand "Becool BC – T5" equipped with two sensors for temperature measurement, with a range of temperature measurements from minus 50 to plus 70 ºC.

The tests were conducted in laboratory conditions with artificially set parameters, in the initial state of the examinees in the sitting position (at the imitation of air temperature minus 10 °C, relative humidity (60–65 %) and air mobility not more than 0.2–0.4 m/s) with the participation of five men moving by wheelchairs and belonging to the second group of restriction of motor activity according to the classification of LPG (with spinal cord lesions at the lumbar spine level) [7–9]. Before the experiment, a medical professional recorded a satisfactory state of health of the subjects (blood pressure, heart rate and body temperature were within normal limits, bladder – devastated). An essential condition for preparing the men involved in the experiment is that they are at rest in the room at a comfortable air temperature for 10 minutes before the experiment.

To carry out the experiment, a prototype of heat-protective product with ACS RTD was used, made of the above mentioned package materials and a constructive device that allows using the local heating system.

Fig. 4 shows the photos of the experiment.

Figure 4 Experimental studies of a prototype of a heat protection product with ACS TC

Also, for the reliability of the obtained data, in the course of the experiment, a thermal imaging camera "Testo 875" was used to take pictures of the surface of the heat-protective product at various low temperatures in order to identify the lower limbs areas exposed to the greatest freezing (Figure 5).

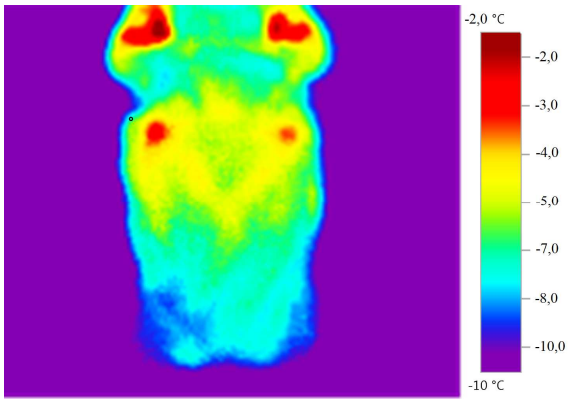

Figure 5 Surface temperature of heat protection product in the area of lower limbs at temperature minus 10 °C

The analysis of the surface temperature of a heat-protective product in the area of the lower extremities at the temperature –10 °C has shown a difference from minus 2 to 10 °C depending on the location of the zones. The knee zone has a minimum negative temperature in this range – minus 2 °C. This is explained by the fact that the thickness of the package of materials in the zone under consideration is minimal, due to the lack of air layer,

which in turn confirms the rational use of an additional layer of insulation material in the knee zone at ambient temperatures below 0 °C.

4. RESULTS

The aforesaid allows to draw a conclusion that the offered automated control system of thermal comfort makes it possible not only to create and maintain thermal comfort of PRM at low temperatures, but also meets the requirements of safety during operation.

Despite the fact that the results of the experiment allow us to draw a conclusion about the expediency of using ACS TC in adaptation heat-protective clothing, it is necessary to expand the experimental base for industrial production, thus confirming the reliability of research.

5. CONCLUSION

In general, we can conclude that the heat protection product developed in this study with the use of automated thermal comfort control systems, including the use of local heating, has no analogues, and fully complies with all the stated properties, contributes to the formation of an attractive image of VEDV, therefore, can contribute to the provision of conditions for their social adaptation.

The obtained results can be used in the educational process, in research and production sectors of technical sciences, light industry (clothing industry), in research institutions of medical and social rehabilitation, as well as prosthetic and orthopedic centers.

REFERENCES

[1] B. Brogin, M.L. Ribeiro Okimoto, C. Martino, Modularity and Variety in the Customization of Functional Clothes for People with Disabilities, June 2017, pp. 569–580.

[2] L.V. Garifulina, N.V. Shramko, Sociocultural rehabilitation of young disabled people, Bulletin of social and humanitarian education and science 3 (2018) 17–231.

[3] Harriet Meinander, Minna Varheenmaa, Clothing and textiles for disabled and elderly people, Espoo, 2002, p. 57.

[4] D. Rowell, L. B. Connelly, Personal assistance, income and employment: the spinal injuries survey instrument (SISI) and its application in a sample of people with quadriplegia, Int. Spinal Cord Society All rights reserved 46 (2008) 417–424.

[5] L.G. Babenko, A.A. Kuchenova, N. Yu. Saveleva, S.V. Kurenova, G.Yu. Volkova, On the development of heat-protective adaptive clothing for people with disabilities, Design and technology 66 (2018) 54–59.

[6] L.G. Babenko, N. Yu. Saveleva, G.Yu. Volkova, Adaptive heat protection bag with additional heating system, Design and technology 67 (2018) 44–48.

[7] I. Rossignoli, P.J. Benito, A.J. Herrero, Reliability of infrared thermography in skin temperature evaluation of wheelchair users, Int. Spinal Cord Society All rights reserved 53 (2015) 243–248.

[8] K.H. Herrmann, I. Kirchberger, G. Stucki, A. Cieza, The comprehensive ICF core sets for spinal cord injury from the perspective of occupational therapists: a worldwide validation study using the Delphi technique, Int. Spinal Cord Society All rights reserved 49 (2011) 600–613.

[9] A. Cieza, I. Kirchberger, F. Biering et al., ICF Core Sets for individuals with spinal cord injury in the long-term context, Int. Spinal Cord Society All rights reserved 48 (2010) 605–312.