ATLANTIS PRESS

Advances in Economics, Business and Management Research, volume 169

Proceedings of the 3rd International Conference of Banking, Accounting, Management and Economics (ICOBAME 2020)

Empowering Coconut Farmer Community for Poverty Alleviation in Kulon Progo, Yogyakarta: A Study of Triple Helix Model

Agus Mulyono
Department of Management
Faculty of Economics and Business, Janabadra University
Yogyakarta, Indonesia
agus.agusmo@gmail.com

Siti Rochmah Ika
Department of Accounting
Faculty of Economics and Business, Janabadra University
Yogyakarta, Indonesia
ika@janabadra.ac.id

Ismanto
Department of Mechanical Engineering
Faculty of Economics and Business, Janabadra University
Yogyakarta, Indonesia
ism@janabadra.ac.id

Abstract: **Coconut sugar or palm sugar is a superior product in the Kulon Progo district, which contributes to locally generated revenue; however, coconut sugar farmers' welfare is still relatively low. Therefore, it needs to be observed the main problems of coconut sugar entrepreneurs. This paper attempts to explore the program and activities taken by the university to empower the coconut farmer community as part of poverty alleviation in the Kulon Progo district, Yogyakarta. The programs were set under the triple helix framework, which involves three parties: the university, government, and coconut farmer community. This study utilized an exploratory approach to determine coconut farmers and coconut sugar entrepreneurs' problems and solutions. Two coconut farmer communities, namely Sumber Rejeki and Nuju Makmur, were taken as a sample. The analysis reveals that the coconut sugar sector's four main problems are the production of coconut sugar, lack of farmer regeneration, marketing, and management. Correspond to these problems; the empowering program consists of providing coconut tree climbing tools, product differentiation, market channeling, administration, and finance training for micro and small enterprises.**

Keywords: coconut farmer, poverty, poverty alleviation, triple helix, Kulon Progo

I. INTRODUCTION

Poverty is a problem faced by the majority of countries in South East Asia, including Indonesia. Poverty alleviation is one of the nine development agenda called NAWACITA initiated by the current country's president, Joko Widodo [1]. On the fifth NAWACITA, the government is determined to improve Indonesians' quality of life by enhancing social welfare and health. The Special Region of Yogyakarta (DIY) is one of 34 provinces in Indonesia whose average poverty rate, i.e., 11.81 percent, exceeds the national average, i.e., 9.66 percent in 2019 [2]. DIY is in the twenty-third position of 34 provinces in Indonesia. The highest poverty rates are in Kulon Progo and Gunungkidul districts.

Based on data from the Regional Development Planning Agency (Bappeda) Kulon Progo, the poverty rate of the Special Region of Yogyakarta (DIY) is still above the national average (13.10 percent). The poverty rate in Kulon Progo Regency is the second-highest after Gunung Kidul, i.e., 20.64 percent [3], [4]. Therefore, the Deputy Governor asked for a strategy to balance growth between districts/cities and assess the Regional Medium Term Development Plan (RPJMD) target of poverty 7 percent level in 2022 [5]. The Deputy Governor also suggests that each head of the regional apparatus organization (OPD) can become a foster father to control poverty levels.

According to [6], one way to reduce the poverty level in Yogyakarta is through community development. To address the poverty problems, the Kulon Progo District's Government (Pemkab) developed the Binangun Family Fostering Group (KAKB). The groups are formed to increase the household's income in the small villages of Kulon Progo. As the district with the lowest per capita income in Yogyakarta Province, Kulonprogo has indeed developed the KAKB as a driving force for rural communities' economy [7]. The community development is in line with the second goal of the development of the Kulon Progo District RPJMD 2017-2021, called the Economic Cross-Cutting. The purpose of economic cross-cutting is that development is directed not only to increase economic growth but also to increase people's income. The Pemkab's program, which is in line with the second direction, is the development of the industrial sector and trade based on village strengthening, which is focused on poor/disadvantaged areas through strategies to increase the competitiveness of local products, as well as fostering rural human resources.

Hargorejo Village is a village in Kulonprogo where most of the population farms coconut and trades coconut sugar and palm sugar. There are several KAKBs in the village, two of which are the Nuju Makmur Coconut Farmer Group and the Sumber Rejeki Coconut Palm Sugar Farmers Group. The members of Nuju Makmur and Sumber Rejeki are 60 and 35 farmers, respectively. Both groups basically face the same problems: traditional equipment used, traditional management in running the business, and lack of farmer regeneration. Detail of the problems is discussed in section III.

This study aims to explore the program and activities taken by the university to empower the Nuju Makmur and Sumber Rejeki coconut farmer communities as part of poverty alleviation in Kulon Progo. The university here refers to the Janabadra University's research, development, and community service institution (LP3M), represented by the community service team members. The community service project is intended to increase rural communities' welfare through the dissemination of research and development (R and D) results of the university to the community.

The university, government, and business community's synergy to reduce poverty are called the triple helix model [8]. In the model, the university academic study and R and D findings are required to represent the university's scientific needs and the government's source of knowledge in deciding policies and regulations relevant to the farmer or entrepreneur community [9]. The government has to have a constructive incentive that, while promoting the economic climate, will encourage the growth and production of business activity [10]. In line with the synergy, the industry also has a duty to contribute to the development of a good business environment, such as the implementation of business ethics, the dedication to corporate social responsibility, and the promotion of national economic growth by being a government partner [11].

Previous studies have documented the collaboration of the government, university, and community for poverty alleviation, for example, [10] in cocoa farmers, [9] farmers in karst mountain, and [12] in coffee farmers. The present study contributes to the growing body of literature in poverty alleviation by elaborating on the poverty reduction efforts of coconut farmers and palm sugar entrepreneurs in Kulon Progo, Yogyakarta. As stated by Nasution [13], farmer empowerment may contribute to the poverty reduction in Kulon Progo, Yogyakarta Special province.

II. METHOD

The present study is an exploratory study that utilized descriptive analysis data. This study was performed in Hargorejo Village, Kokap Sub-district, Kulon Progo District, Yogyakarta Special Province, Indonesia. Two KAKBs, namely Nuju Makmur and Sumber Rejeki, were taken as a sample or partners for poverty alleviation programs. This study obtained data from the Bappeda, BPS, and farmers' interviews. The university's community service project was started in July 2019 and evaluated at the end of November 2019.

III. RESULTS AND DISCUSSIONS

The coconut farmers' current situation and the farmers' problems are discussed in this section, along with the figures of illustration. The identified problems are as follows. Our identification is quite similar to coconut farmers' problems in Banyumas District, Central Java Province [14].

A. *Production Quantity and Quality, Climber Safety Risk, and Lack of Farmer Regeneration*

The Nuju Makmur Coconut Farmer Group and the Tapper Sumber Rejeki Group rely on tree climbers manually to extract coconut sugar raw materials. The tapping sap activity is usually carried out twice a day, namely, in the morning around 5 am to 9 pm and the afternoon around 4 pm to 7 pm. The tappers take the juice from the coconut trees, which can reach 30 meters high. They do not just pick up on one tree, but usually about 10 trees at a time. In the afternoon, they do another collection of sap water, and this is done repeatedly by the tappers. From about 10 -15 trees, they can produce 3-5 liters of sap per day.

In climbing trees, the tappers do it manually. They only use machetes to slice the sap and *pongkor*, a reservoir for sap water to be replaced. The pongkor will be full of sap water/juice in 7-8 hours. It must be taken immediately and processed within two hours; otherwise, the sweet taste will turn sour due to fermentation. There is no other safety device in climbing a tree as high as 30 meters, so the risk of falls and work accidents is very high. During the rainy season, tapping sap's work risk becomes even greater because the coconut tree is slippery to climb.

The profession of tapping sap is carried out by men who are more than 40 years old. Young people are not interested in becoming sap takers. They prefer to work in another profession or work in the city. Because it is done manually, the maximum number of coconut trees that can be climbed is around 10-15, meaning a maximum of only 30 *pongkors* can be picked up by a sap taker per day.

Fig. 1. The coconut climber and his *pongkor*

B. *Low Bargaining Power on Price Selling*

The products of the two groups are juice water called *legen* and coconut sugar and simple palm sugar. So far, they have been selling to collectors. Coconut sugar produced by farmers is usually sold directly to the market or collectors who come on Tuesday and Friday every week. There needs to be assistance regarding the diversification of *legen* products or coconut sugar

and simple palm sugar and their marketing links to increase group sales turnover.

C. Traditional Management of Business

In almost all home industries, there is no separation of the owner's assets from business assets. This causes the position of assets and income from operations to be unknown. There is a need for assistance in business financial management and accounting records for farmer groups.

After identifying the coconut farmer's problems, this study then determines the solutions for the problems to improve the household income. Figure 2 illustrates the research framework of the study. The discussions of each solution correspond to each problem are as follows.

A. Coconut Tree Climbing Tool

The results of LP3M's R and D in the university is a coconut tree climber tool. The tool addresses sap takers' safety issues and increases the number of trees that can be climbed every day. With this tool, it is hoped that the productivity of the sap or *legen* can increase so that farmers' income also increases.

This tool can easily be used by people who cannot climb trees manually. Young people in the village who are not used to climbing or cannot climb can even climb coconut trees safely by using this tool. This tool works under the force of gravity to create a snare effect on the coconut tree. This tool consists of 2 tools attached directly to the coconut tree—one for the left foot and hand, the second for the right leg and hand. When the right leg is lifted, and the hand works to lift the tool upwards, the steel cable will stretch and will not entangle the coconut tree making it easier to move upwards. When the feet start to step on, the steel cables' snares will react, thus binding the coconut trees firmly. Then followed by the alternating left hand and foot so that the tool will work as a ladder. Figures 3 and 4 presents the design of the coconut tree climbing tool.

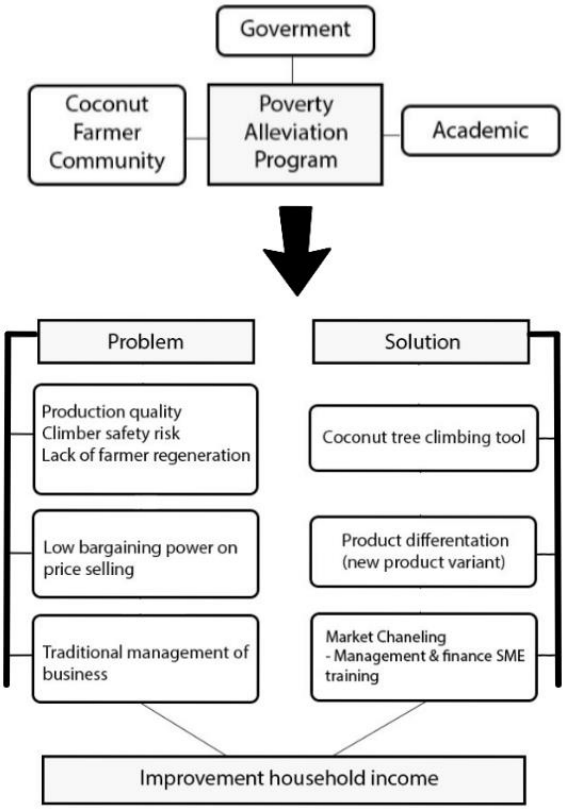

Fig. 2. The research framework of the study

Fig. 3. Technical drawing of a coconut tree climbing tool I

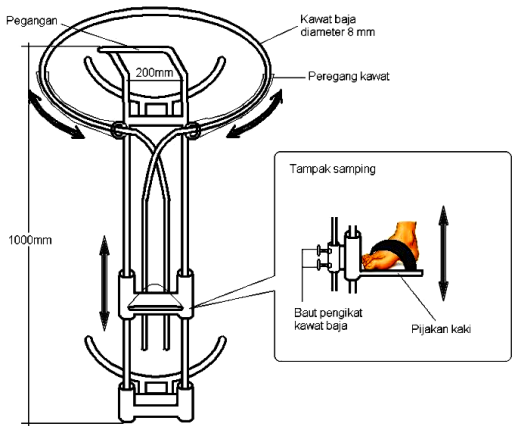

Fig. 4. Technical drawing of a coconut tree climbing tool II

Specification detail of the tool is available in [7].

As a package for disseminating the tools, the university community service team also conducted training on the use of coconut tree climbing tools. At this stage, the activity's main focus is socialization, training, evaluation, and dissemination of coconut tree climbing tools. Socialization and training activities have been carried out with ready prototypes. The government fully finances the production and dissemination of the tools to the farmer groups through the Technology Product Disseminated to the Community Grant of the Ministry of Research and Technology and Higher Education.

B. *Product Differentiation (New Product Varian)*

To solve the second problem, namely low bargaining power on price selling, the university community service team held training on product diversification and marketing channeling. This training assists with marketing channels by finding marketing partners or fostering care for partner groups' products. One of the successful product diversifications is a variant of the chocolate *legen* (sap water) drink packaged in bottles. Household Industry Food Permits (PIRT) for products have also been obtained under applicable regulations.

Meanwhile, marketing channels are carried out by accommodating the products from the coconut farmer groups to large palm sugar entrepreneurs to be marketed using brands with quality standards that have been agreed upon between the two KAKBs and the entrepreneurs.

This program collaborates with Mrs. Dinar, owner of Adana Palm Sugar, as the foster parents of both KAKBs in marketing. Some palm sugar products are marketed wholesale in sack packages using the Sumber Rejeki label. Some are marketed under the Adana label. The Adana label is used for flavored variants of ant sugar mixed with various kinds of rhizomes such as turmeric, white turmeric, and ginger. The product image of the marketing channel is presented in Figure 5.

Fig. 5. Product differentiation the chocolate *legen*

This program collaborates with Mrs. Dinar, owner of Adana Palm Sugar, as the foster parents of both KAKBs in marketing. Some palm sugar products are marketed wholesale in sack packages using the Sumber Rejeki label. Some are marketed under the Adana label. The Adana label is used for flavored variants of ant sugar mixed with various kinds of rhizomes such as turmeric, white turmeric, and ginger. The product image of the marketing channel is presented in Figure 5.

C. *Management and Finance Small Medium Enterprise Training*

In this part, partner groups are given training on the management of farmer group administration. The coconut farmer groups are taught books that must be available in farmer groups, such as group inventory books, group meeting books, group cash books, and accounting reporting issues. This training is an orderly administration of the farmer group, and each member can separate business assets from a personal asset.

IV. Conclusion

This study utilized an exploratory approach to determine coconut farmers' problems and coconut sugar entrepreneurs and solutions. Two coconut farmer communities, namely Sumber Rejeki and Nuju Makmur, were taken as a sample. The analysis reveals that the coconut sugar sector's four main problems are the production of coconut sugar, lack of farmer regeneration, marketing, and management. Correspond to these problems, the empowering program consists of providing coconut tree climbing tools, product differentiation, market channeling, and administration and finance training for the micro and small enterprises.

Acknowledgment

We would like to express our gratitude to the Ministry of Research and Technology and Higher Education for the research funding.

References

[1] S. Eko, Z. Ernada, and H. L. Gaol, “Poverty alleviation programmes lessons from Indonesia,” in *6th Meeting of COMCEC Poverty Alleviation*, 2015, no. September.

[2] Central Bureau of Statistics, “Profile of Poverty in Daerah Istimewa

Yogyakarta," 2020. https://yogyakarta.bps.go.id/pressrelease/2020/07/15/1063/profil-kemiskinan-daerah-istimewa-yogyakarta-maret-2020.html#:~:text=Berdasarkan hasil Susenas Maret 2020,449.485 per kapita per bulan.

[3] Central Bureau of Statistics of Kulon Progo District, *Ringkasan Eksekutif Kondisi Kemiskinan Kabupaten Kulon Progo*. Wates: Central Bureau of Statistics Of Kulon Progo Districts, 2020.

[4] Bappeda, "Pengentasan Kemiskinan daerah Istimewa Yogyakarta," 2020. http://bappeda.jogjaprov.go.id/dataku/infografik/kemiskinan.

[5] Chandra Iswinarno, "Tingkat Kemiskinan di Yogyakarta Masih Tinggi," *SuaraJogja.id*, 2019.

[6] S. Roitman, "Urban poverty alleviation strategies in Yogyakarta, Indonesia: Contrasting opportunities for community development," *Asia Pac. Viewp.*, vol. 60, no. 3, pp. 386–401, 2019, doi: 10.1111/apv.12229.

[7] A. Mulyono, S. R. Ika, and Ismanto, "Penerapan Teknologi Alat Pemanjat Pohon Kelapa bagi Kelompok Petani Kelapa dan Pengambil Nira di Desa Hargorejo Kabupaten Kulon Progo," in *Seminar Nasional Hasil Riset dan Pengabdian II*, 2019, pp. 109–120.

[8] H. Etzkowitz, *The Triple Helix: University-Industry–Government Innovation in Action*. London: Routledge, 2008.

[9] E. Antriyandarti *et al.*, "Poverty alleviation system of dryland farm community in karst mountains Gunungkidul, Indonesia," *IOP Conf. Ser. Earth Environ. Sci.*, vol. 200, no. 1, 2018, doi: 10.1088/1755-1315/200/1/012062.

[10] C. P. M. Sianipar and K. Widaretna, "NGO as Triple-Helix Axis: Some Lessons from Nias Community Empowerment on Cocoa Production," *Procedia - Soc. Behav. Sci.*, vol. 52, pp. 197–206, 2012, doi: 10.1016/j.sbspro.2012.09.456.

[11] K. Kadiman, "Kusmayanto K 2005 The Triple Helix and The Public," *Business*, vol. December, pp. 1–5, 2006.

[12] J. Bray and J. Neilson, "Examining the interface of sustainability programmes and livelihoods in the Semendo highlands of Indonesia," *Asia Pac. Viewp.*, vol. 59, no. 3, pp. 368–383, 2018, doi: 10.1111/apv.12205.

[13] Z. Nasution, "Farm development and rural poverty comparison among villages in Kulon Progo Regency of Yogyakarta special province of Indonesia.," *Univ. Gadjah Mada, Yogyakarta, Indones.*, no. 9963, 2008.

[14] S. Sudarto, A. Suroso, and D. P. Jati, "Potential and Problems of Small Medium Enterprise (SMEs) Coconut-Sugar: Case Study in Banyumas Regency, Central Java Indonesia," *Int. J. Bus. Manag.*, vol. 8, no. 3, pp. 18–26, 2013, doi: 10.5539/ijbm.v8n3p18.