ATLANTIS PRESS

Advances in Engineering Research, volume 204

Proceedings of the 2021 10th International Conference on Applied Science, Engineering and Technology (ICASET 2021)

Design of a CAN-485 Conversion Circuit

Qinghui Yuan [1, *], Bin Zhang[1] and Qingfei Yuan [2]

[1] *Binzhou Polytechnic, Binzhou, Shandong Province256603, China*
[2] *China Offshore Bitumen Co.LTD, Binzhou, Shandong Province256600, China*
[*]*Corresponding author. Email: sdyqh1979@126.com*

ABSTRACT
CAN (Controller Area Network) is a kind of international standard, and the relatively high price-performance field bus, which in today's developments in the field of automatic control can play an important role. In the full understanding of field bus based on the theory, this paper presents a CAN-bus network communication with the 485 conversion module design.
Keywords: *CAN main line, RS-485 main line, Conversion circuit*

1. INTRODUCTION

In the past 20 years, the proposed standard RS-485, as an electrical specification of multi-point differential data transmission, has been used in many different fields as data transmission link. Due to many limitations of RS-485 bus itself, with the development of science and technology, the disadvantages of RS-485 bus, such as low efficiency, poor real-time performance of the system, low reliability of communication, high maintenance cost in the later stage, complex network engineering debugging, unsatisfactory transmission distance, few nodes that can be attached to a single bus, and inflexible application, are gradually exposed.

2. COMPARISON BETWEEN CAN BUS AND RS485

• *2.1. Speed and distance*

CAN and RS485 high-speed 1mbit / s transmission distance does not exceed 100m, it can be said that the high-speed distance is similar. However, at low speed, 10km can be achieved at 5kbit / s, while 485 can only achieve low speed of 1219m. It can be seen that can has absolute advantages in long-distance transmission.

• *2.2. Bus utilization*

RS485 is a single master-slave structure, that is, the bus can only have one host, the communication is initiated by the host, the host has no command, the next node cannot send, and send back, after receiving the reply, the host to the next node query, in order to prevent multiple nodes to send data to the bus, and lead to data confusion. The CAN bus is a multi host structure, each node has a CAN controller, multiple nodes send, send ID number automatic arbitration, this can prevent the bus data confusion, and a node send, the other node can detect the bus idle speed, and send immediately, so as to save the host query, improve the bus utilization, improve the speed. Therefore, it has higher practical requirements in the automotive system, and all use CAN bus or other similar bus.

• *2.3. Error detection mechanism*

RS485 is the constraint of the physical layer, because it only uses the bus level. The specific data transmission and reception is a bit like transparent transmission, and there is no protocol in it. Unless the user has defined some simple protocols, but can is different. As the fieldbus protocol, the software of the transmission protocol layer has done more work. Students interested can check a can protocol, It's called CAN open. It's widely used in automobile and motor control... 0x1F...0xxx series of things, and then by the CAN controller to analyze. This is the CAN protocol data frame that I use the oscilloscope to capture after decoding. It's very complex. What CRC is there? Only CAN controller can analyze it. So it's much more complex than RS485. Because the amount of data processed by CAN is large, the theoretical speed of CAN is lower than 485.

• *2.4. Error detection mechanism*

Multipoint conflict mechanism: RS485 is not available. After sending data, it will switch to receiving state. Moreover, there must be one master and many masters, so can has ID, so can is more efficient in terms of bus utilization.

• *2.5. Error detection mechanism*

On the hardware circuit: In terms of hardware circuit, differential pair wiring is adopted, and twisted pair cable mode is adopted. It is necessary to connect the terminal

resistance of 120 ohm. From the outside, the two wiring modes are very similar.

CAN bus has obvious advantages in cost, reliability, real-time, flexibility, ease of use, communication ability, transmission distance and so on. It has become one of the most promising fieldbus in the industry. However, RS-485 bus plays a leading role in the application. Therefore, it is necessary to design the communication interface circuit between CAN bus and RS-485 bus.

3. HARDWARE CIRCUIT DESIGN

The CAN-485 interface circuit designed in this paper is essentially the combination of CAN intelligent node and 485 level conversion circuit. AT89C51 is used as the node microprocessor. In the CAN bus communication interface, SJA1000 is used as the can communication controller and 82C250 as the CAN bus driver. MAX485 is used for 485 level conversion circuit. The high speed optocoupler 6n137 connects SJA1000 and 82C250, which plays an electrical isolation role. The single chip AT89C51 completes the initialization of SJA1000 and the data communication between CAN bus and RS-485 bus. The control of SJA1000 internal register by MCU is carried out by accessing external register.

• *3.1. Hardware architecture*

The hardware circuit of CAN-485 intelligent interface is mainly composed of the following parts: microprocessor AT89C51, independent CAN communication controller SJA1000, CAN bus driver 82C250, high-speed optocoupler 6n137, TTL level and RS-485 level converter MAX485.

• *3.2 CAN interface module*

CAN interface module includes bus controller and transceiver. SJA1000 is selected as CAN bus controller. It is a CAN controller launched by Philips company, which fully conforms to the CAN bus protocol. It can complete message control, data filtering and other can controller functions. SJA1000 not only supports basic can (CANBUS 2.0A) mode supported by pca82c200, but also supports Pelican (CANBUS 2.0B) mode with stronger functions; Tja1050 is selected as transceiver, which is the interface between CAN protocol controller and physical bus. It is a standard high-speed CAN transceiver.

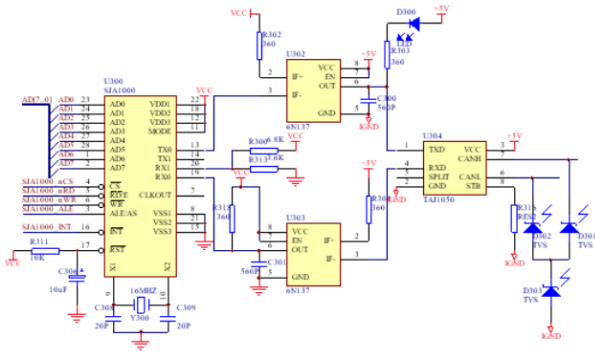

Figure 1circuit diagram of CAN module

As shown in Figure 1, ad0-ad7 of SJA1000 is connected with the data bus of single chip microcomputer, p2.0 pin is used as the chip selection enabling end of SJA1000, and ale, WR and RD control the sending and receiving of SJA1000 data. The 11 pin mode is connected to the high level, and the Intel two frequency division mode of 51 series 8-bit microcontroller is selected. Pin 16 is the interrupt signal, connected to the external interrupt pin of MCU. TX1 pin is suspended, and the potential of rx1 pin must be maintained above 0.5Vcc, otherwise the level logic required by CAN bus will not be formed.

• *3.3 RS485 interface module*

The RS485 interface module uses MAX485 chip as the bus transceiver, which is a + 5V low-power half duplex device. MAX485 driver output is differential output, fully meet the requirements of RS485 serial protocol, compatible with industrial standards, in line with RS485 serial protocol electrical specifications. The circuit connection is shown in Figure 2.

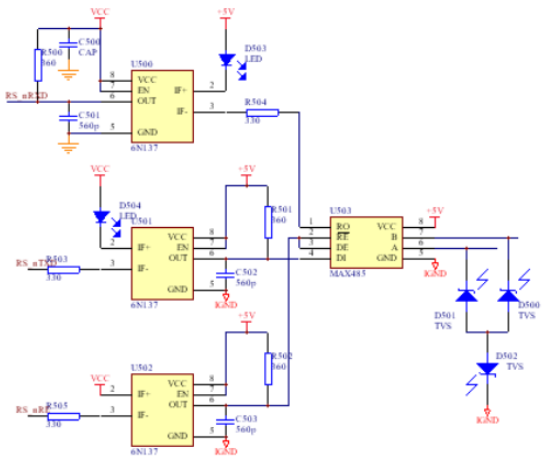

Figure 2 RS485 module circuit diagram

• *3.4 Interface between SJA1000 and AT89C51*

Ad0-ad7 of SJA1000 is connected to port P0 of AT89C51, and / CS is connected to p2.7 of AT89C51. When p2.7 is 0, the CPU can select SJA1000. The CPU can read / write port P0 by accessing the low address area of external RAM, and read / write the corresponding registers of SJA1000. The / RD, / WR and ale of SJA1000 are respectively connected with the corresponding pins of AT89C51, / int is connected with / INT0 of AT89C51, and AT89C51 can also access SJA1000 through interrupt mode. In order to increase the stability of the system, double crystal oscillator is used. AT89C51 adopts 11.0592Mhz crystal oscillator and SJA1000 adopts 16mhz crystal oscillator.

• *3.5 Connection between CAN controller and driver*

In order to enhance the anti-interference ability of CAN bus node, tx0 and rx0 of SJA1000 are not directly connected with TXD and RXD of 82C250, but are connected with 82C250 through high-speed optocoupler 6n137, which realizes the electrical isolation between each point on the bus.

4. SOFTWARE DESIGN

In addition to the driver of a single module, the most important part of the software design is to realize the conversion of different protocols between the two networks. Physical layer and data link layer are defined in CAN protocol reference model, while only physical layer is defined in RS485 protocol reference model. The software design of CAN-485 interface circuit mainly includes five parts: CAN node initialization, CAN message receiving and CAN message sending.

• *4.1 CAN node initialization*

Initialization mainly includes the setting of working mode, receiving filter mode, receiving mask register, receiving code register, baud rate parameter and interrupt permission register. After completing the initialization of SJA1000, SJA1000 can return to the working state and carry out normal communication tasks.

• *4.2 CAN message sending process*

When SJA1000 is sending a message, the send buffer is written locked. So before a new message is placed to the send buffer, the main controller must check the "send buffer status flag" (TBS) of the status register. When the transmit buffer is locked, the main program stores the new message in a temporary register and sets a "more information" flag to indicate that a message is waiting to be sent.

After receiving the interrupt processing from can controller, the main controller will check the interrupt type. If the transmission is interrupted, it will check whether there are more messages to be sent. A waiting message is copied from the temporary memory to the transmit buffer, and the flag indicating that more information is to be sent is cleared. Set the TR flag of the send request in the command register to enable SJA1000 to start sending.

• *4.3 CAN message receiving process*

CAN message receiving subroutine is responsible for receiving messages of nodes and handling other situations. The structure of receiving subroutine is more complex than that of sending subroutine, because in the process of processing received message, it is necessary to deal with such situations as bus closing, error alarm, receiving overflow, etc. There are two main ways to receive and send SJA1000 message: interrupt and query. Query mode should prohibit receiving interrupt enable, and interrupt mode is generally used in the case of high real-time requirements.

5. CONCLUSION

CAN (Controller Area Network) bus, also known as controller area network, is a kind of multi host local area network advanced by Bosch Company in modern automobile technology. Because of its excellent performance, high reliability, unique flexible design and low price, it has been widely used in many fields, such as industrial site, control intelligent building, community security, transportation, medical equipment and environmental monitoring. CAN has been recognized as one of the most promising fieldbus.

REFERENCES

[1] Li Hua. MCS-51 Series MCU practical interface technology [M], Beijing: Beijing University of Aeronautics and Astronautics Press, 1993

[2] Cai Li. Interface design between RS-485 communication and CAN bus [J]. Journal of Wuhan University of Technology (information and Management Engineering Edition) 2002 (1)

[3] Liu Lianji. Design of recording / playing device and circuit for ISD voice chip [J]. Journal of Qingdao Ocean University, 1997,27 (3): 291-299

[4] Tang Shuhong. Design of high speed and high precision data acquisition system based on CPLD （ J ） . Microcomputer information, 2008, 24 (3 / 2): 228-229.

[5] P. Xu, J. Cao, et. al., Quantum chemical study on the adsorption of megazol drug on the pristine BC3 nanosheet, Supramolecular Chemistry, 33(2021)63-69.
[6] H. Li, P. Xu, et. al., Low-voltage and fast-response SnO2 nanotubes/perovskite heterostructure photodetector, Nanotechnology, 32(2021)375202.
[7] P. Xu, N. Na, Study on Antibacterial Properties of Cellulose Acetate Seawater Desalination Reverse-Osmosis Membrane with Graphene Oxide, Journal of Coastal Research, 105(2020)246-251.

Author introduction

Yuan Qinghui, male, Jining Shandong, Binzhou Polytechnic, mainly engaged in electrical automation engineering research and management.