ATLANTIS PRESS
Advances in Social Science, Education and Humanities Research, volume 630
2nd International Conference on Education and Technology (ICETECH 2021)

Effects of Visual Learning Geometry Kits (VLGeo-Kits) on Students' Level of Geometrical Thinking

Faridah Hanim Yahya [1,*] Henry Kurniawan [2], [3]Norin Rahayu Shamsuddin, [4]Rosita Mat Zain

[1] *Faculty of Human Development, Universiti Pendidikan Sultan Idris, 35900 Tanjong Malim, Perak, Malaysia*
[2] *Politeknik Negeri Lampung, Jl. Soekarno Hatta No. 10 Rajabasa, Bandar Lampung, Indonesia*
[3]*Universiti Teknologi MARA (UiTM) Cawangan Kedah, Kampus Merbok, 08400 Merbok, Kedah, Malaysia.*
[4]*Curriculum Development Division, Ministry of Education, 62604 Putrajaya, Malaysia*

[*]*Corresponding author. Email: faridahhanim@fpm.upsi.edu.my*

ABSTRACT

Students' poor performance in Geometry is due to their problem in visualizing. Therefore, teaching strategy for Geometry should be embedded with visualization techniques. Visual learning Geometry Kits also known as VLGeo-Kits, is a teaching approach that consists of 3-Dimension blocks, screencast video and SketchUp Make. The purpose of this study is to investigate the effects of VLGeo-Kits in developing students' performance in Geometry for topic Plans and Elevations. This study was conducted using a quasi-experimental single group pre-post-test which was employed for five weeks. A total of 54 form three students were involved in this study. Van Hiele Geometrical Thinking (vHGT) test was given to the samples before and after their learning using VLGeo-Kits. The findings showed very positive development in geometry thinking after learning using VLGeo-Kits. It was found that, none of the samples was at visualization level and majority of the students (59.3%) were at informal deductive level. The finding indicated that the students' level of vHGT after learning using VLGeo-Kits was higher as compared to without using VLGeo-Kits. In addition, Z obtained with p-value was -5.982 proving there was a significant difference in students' level of vHGT test before and after learning using VLGeo-Kits. In conclusion, the findings showed that VLGeo-Kits had succeeded in enhancing students' level of geometrical thinking. Hence, this teaching approach should be implemented in the curricular of mathematics for secondary school.

Keywords: *geometrical thinking, visualization technique, plans and elevations, screencast video.*

1. INTRODUCTION

Geometry is a field in mathematics that involves visualization skills as most of the concepts are learnt using diagrams and shapes [1]. In addition, spatial ability is also needed in learning 3-Dimension (3D) Geometry [2]. Ministry of Education (MOE) has benchmarked the performance of Malaysian students since 1999 based on Trends in Mathematics and Science Studies (TIMSS) [3]. TIMSS is organized by the International Association for the Evaluation of Educational Achievement (IEA), the United States of America for mathematics, science, and reading. This assessment is conducted on 14-year-old students every four years. The average international score for TIMSS which is stated by IEA is 500. The report for TIMSS from 1999 to 2019 showed that the score mean for Malaysian students was below the average [3]. Thus, students are having problems in learning Geometry. Students' poor performance in Geometry is based on poor in visualization [3], [4]. Besides that, students' weakness in Geometry are related to their low level of geometrical thinking [5], [6] and low visual spatial skills [7], [8]. National Council of Teachers of Mathematics (NCTM) is one of the professional bodies in United States of America for mathematics field in education. NCTM considers these two elements as threats in learning Geometry [9]. The focus of this paper is only on the level of geometrical thinking.

2. BACKGROUND OF THE STUDY

2.1. van Hiele Geometrical Thinking (vHGT)

The level of geometrical thinking is connected to van Hiele's theory which is based on van Hiele geometrical thinking model [10]. This model consists of five (5) hierarchal levels: visualization, analysis, informal deduction, formal deductive and rigor. According to van Hiele, students will start from the first level and move to the next level while learning Geometry. The explanation of the levels is as below:

(i) Visualization level (L1) - students are able to visualize shapes of the object.

(ii) Analysis level (L2) - Students can identify the properties of the shape.

(iii) Informal deductive level (L3) - Students can combine shapes and properties of the object and capable to present them in logical ordering.

(iv) Formal level (L4) - Students can produce proof with formal argument concerning the properties of the object.

(v) Rigor (L5) - Students will be comparing the knowledge of Geometry based on different axiom.

According to [11], the fifth level is not suitable for students in secondary school as it requires high level of thinking. Crowley suggested that teachers should provide learning materials which were relevant to students' geometrical thinking at each level from the model. Previous studies had shown that majority of the secondary school students were in the first level from the thinking model [12], [13], [14], including high achievers [15]. On the contrary, they should be at least at 4th level (formal deductive), according to [9]. Consequently, teachers should find ways to enhance students' performance in Geometry.

2.2. Problems in Visualizing

According to [16], weak students have problem in rotating and transforming 3D objects in their minds. This argument is supported by [17] that students have difficulty in visualizing solid objects mentally. Similarly, a report from Malaysian Examination Syndicate also showed that students have problems in visualization in topic Plans and Elevations [18]. Due to their inabilities to visualize, they failed to draw the orthogonal line correctly and they did not draw dashed lines for the hidden lines in the object [18]. Topics in 3D Geometry are related to students' life and their future careers [19]. Furthermore, these topics are the prerequisite for their entrance at university level for technical and science fields [20]. Therefore, a learning strategy which can overcome the obstacles in learning Geometry is needed.

2.3. Visualization Techniques

Techniques of visualization in Geometry are recommended to solve problems encountered by weak students. Previous studies showed that there are multiple ways to assist students in visualizing such as using concrete manipulative materials [21], paper folding [22], digital pen [23] and computer applications [24]. The usage of technology by teachers in teaching and learning is supported by MOE as stated in the educational blueprint [25]. According to [26], technology that has been used by teachers can be categorized into two forms: digital and non-digital technology. The 3D blocks represent concrete manipulative object (non-digital) and SketchUp Make is the dynamic Geometrical Software (DGS) that researchers have selected for this study. DGS provides visual tools to students when learning Geometry [14],[23],[27],[28]. However, some students do not remember all the steps in using the tools [29]. Moreover, teachers find it challenging to teach students with different ICT skills [30]. These obstacles can be solved using video tutorials with a screencast technique, as suggested by [31]. The tools in 3D software can be recorded as video tutorials using special software [32].

3. VISUAL LEARNING GEOMETRY KITS (VLGEO-KITS)

The researchers proposed a learning method called VLGeo-Kits, that integrates non-digital and digital technology. It consists of four tools: a module, 3D blocks, screencast video and SketchUp Make.

3.1. VLGeo-Kits Module

The module is following chapter 7 of the form 3 mathematics, Plans and Elevations, designed for two learning objectives: Orthogonal projections and Plans, and Elevations. The first objective for this topic requires students to draw orthogonal projections and compare and contrast between objects and the corresponding orthogonal projections. In contrast, the second objective requires them to draw the plan and elevations of an object to scale. Van Hiele learning phase is selected as a framework in the module, for teachers to utilize van Hiele's theory in their teaching. The module is designed based on five phases of van Hiele learning phase: Information (Phase 1), Guided Orientation (Phase 2), Explicitation (Phase 3), Free Orientation (Phase 4) and Integration (Phase 5). The explanation for each phase is as below: (i) Phase 1 - Provide information about the learning objective and the level of vHGT. (ii) Phase 2 - The concept of the orthogonal projections will be introduced. The 3D blocks will be provided for students to arrange the blocks to form a composite block and figure out if there are any hidden lines from different angles. Then, they will hands-on use SketchUp Make, to check their answers. The screencast video is provided to help them to understand the steps when using tools in

SketchUp Make. (iii) Phase 3 - Students will express their opinion about what they have learned. (iv) Phase 4 - Students are free to choose any digital objects given in the exercises, to test their understanding of the concept. (v) Phase 5 - Students will conclude what they have learned after completing the exercise.

3.2. 3D Blocks

The blocks are made of acrylic Perspex. This special material is chosen to assist students in visualizing the hidden lines from top, front and side views. Students are required to arrange the blocks according to the exercise given in the module. Figure 1 shows the image of the 3D blocks that is used in the exercise.

Figure 1 The 3D Blocks

3.3. Screencast Video and DGS

The screencast video consists of a special technique that can capture steps in using tools in the software. Moreover, the special effects were embedded in the video to guide the students in drawing the orthogonal projections, plans and elevations of the solid objects. Figure 2 shows an example of a special effect, where a wide arrow complete with text is used to show the viewers the position of 'section cut' tool in the software.

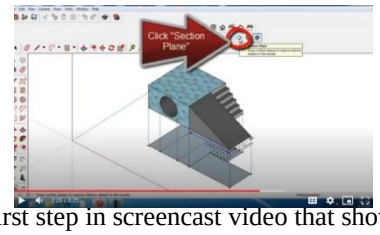

Figure 2 First step in screencast video that shows the icon for 'Section Cut' tool

While Figure 3 demos the step to place the cutter on the selected surface of the 3D block.

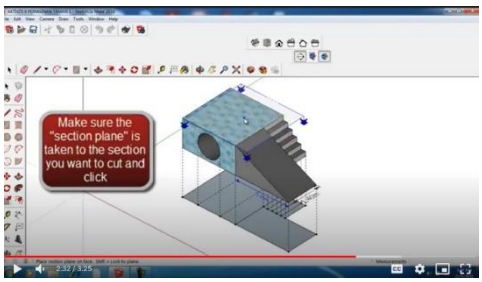

Figure 3. Second step in screencast video that shows how to cut the surface of the object using Section Cut tool

Figure 4 shows the effect of using the section cut tool. Students can view the hidden lines in the solid object. This will help them to comprehend the reason to draw dashed line for the plan.

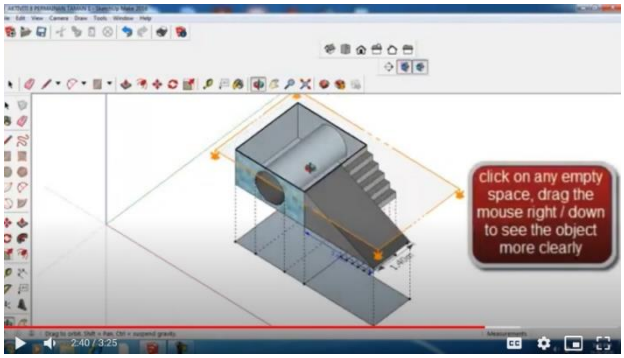

Figure 4 Third step in screencast video that shows the hidden lines in the object

SketchUp Make is the DGS, which is free, downloadable from the internet. Figure 5 shows the flowchart process of learning strategy using VLGeo-Kits.

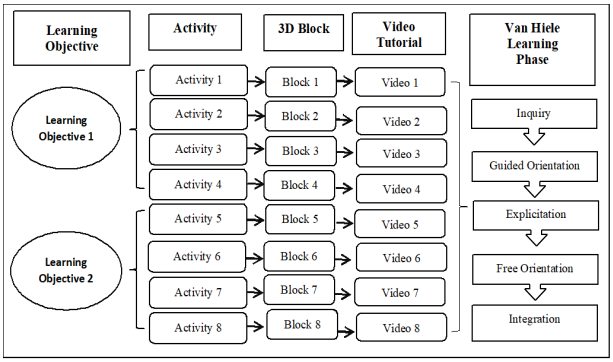

Figure 5 Flowchart of VLGeo-Kits

4. THE PURPOSE OF THE STUDY

This study is only focusing on vHGT level. Thus, this study was conducted to assess if VLGeo-Kits effectively develop level of vHGT. Therefore, the research question specifically asks; Is there a significant difference between the level of vHGT of students before and after learning using VLGeo-Kits.

5. METHODOLOGY AND FINDINGS

5.1. Methodology

This study was conducted using quantitative research. This study was carried out for 5 weeks through a quasi-experimental design approach that involves single group with pre and post data collection. This study involved 54 high achievers' students, 29 female and 25 males from a secondary school in Malaysia. Pre-test was conducted before the intervention and post data collection was carried out after the students attended the activities that were developed in the module. The instrument used was

vHGT test. The Cronbach Alpha value for the reliability of the test was .75 [33]. It comprises of 25 multiple-choice questions. Each level will have five questions. To proceed to the next level, the student needs to score at least three of the five questions in one level. The scores given for the first, second, third, fourth and fifth levels are 1 point, 3 points, 7 points, 15 points, and 31 points, respectively.

5.2. Findings

Table 1 showed positive development of vHGT level whereby after learning via VLGeo-Kits, there were no longer students at the analysis level and the majority belongs in the informal deductive level, which represents 59.26% of the students while the most favorable outcome is that 6 of them were identified at the level of the formal deductive level.

Table 1. Pre-post-test on level of vHGT

Test	L1	L2	L3	L4	Total
Pre	29	11	11	3	54
Post	0	16	32	6	54

Table 2 showed the differences of vHGT level before and after learning via VLGeo-KITS. The Wilcoxon Signed Rank test was conducted. Referring to rank testing in Table 3, all of the students are in the Positive Rank +22.00. This means that students' vHGT level after learning via VLGeo-KITS is higher than prior.

Table 2. Positive and Negative Ranks for level of vHGT

		N	Mean Rank	Sum of Ranks
Post - pre	Negative Ranks	0[a]	.00	.00
	Positive Ranks	43[b]	22.00	946.00
	Ties	11[c]		
	Total	54		

While Table 3 shows the value of Z obtained is -5. 982 with p (Asymp. Sig. 2-tailed) <0.05 with median score for Pre = 1 and Post = 3. This confirms that there is a significant difference before and after in students' vHGT level after learning using VLGeo-Kits.

Table 3. The output for Wilcoxon Signed Test

Wilcoxon Signed rank	
	Post - Pre
Z	-5.982
Asymp. Sig. (2-tailed)	.000

Table 4 shows the value of effect size as suggested by [34]. In addition, based on the calculation of effect size of 0.58 and a reference to [34] , explains that the difference of level of vHGT before and after learning to use VLGeo-Kits is moderate.

Table 4. Criteria for effect size

Value of d	Criteria
0< d < 0.2	Small
0.2 < d < 0.5	Medium
0.5 < d < 0.8	Large
d > 0.8	Very large

6. DISCUSSION

The findings showed that students' level of vHGT after learning via VLGeo-KITS is higher than before using the Kits. There may be several reasons explaining this effect. The combination of screencast video with DGS is needed in teaching Geometry, especially for low achievers. Similar results were found by Turgut and Urgan [7), that showed the students were facing difficulties in using the tools in SketchUp Make. Thus, screencast video provides solution for this problem [31], [27]. Besides that, the DGS can positively affect students' learning in drawing the orthogonal projections, plans and elevations. Firstly, using orbit tool, they will able to see the edges of the solid object to decide the numbers of normal lines needed in drawing orthogonal projection. Secondly, students can easily view the angles inside the object clearly to confirm the number of edges on the object. Thirdly, students can see the transformation from 2D to 3D or form 3D to 2D of the solid object to decide the images for the plans and elevations before drawing them. Lastly, using cut tool, the students can cut the surface of the object to view any hidden lines inside the object. Then, they will decide when to use solid lines and dashed lines in their drawing. Thus, DGS could increase the level of vHGT. These findings are supported by other studies [13], [34]. Furthermore, the activities in the module which is based on the levels of van Hiele geometrical thinking also affect students' learning in Geometry. These findings are also supported by previous studies [5], [35], [36]. Besides that, the blocks used as the concrete manipulative object also had impact on students learning. This finding is supported by [37]. Hence, this learning kits has a good potential to support students' visualization for topic Geometry.

7. CONCLUSION

The purpose of the study is to examine the effectiveness of the learning strategy using VLGeo-Kits to increase students' level of geometrical thinking. The findings showed that VLGeo-Kits is an effective learning strategy that assists students in visualizing the concepts in Geometry. The combination of the concrete manipulative object, screencast video and dynamic software as a mode learning should be embedded in the current curriculum of mathematics in secondary school for topic Plans and Elevations. Hence, MOE should introduce proper training and workshops to teachers, in order to integrate the teaching mode in their lesson. Besides that, MOE

should provide students with learning facilities required to assist students in learning using technology. Teachers should encourage students to engage in hands-on activities to help them visualise the 2D and 3D concepts in Geometry. On the other hand, students must set minds-on attitude when using tools in the software to be able to construct the concepts of Geometry on their own. Further research should be conducted using the same approach for other 3D topics in Geometry.

ACKNOWLEDGMENTS

This paper was based on a research project entitled "Kesan Penggunaan Modul Strategi Pembelajaran Screencast SkecthUp Make (SPS-SUM) Untuk Meningkatkan Kemahiran Visual Spatial Dan Tahap Pemikiran Geometri Pelajar". The authors would like to extend their gratitude to the Research Management and Innovation Centre (RMIC), Sultan Idris Education University (UPSI) for the University Research Grants (code: 2019-0083-107-01) which funded the research.

REFERENCES

[1] Ngirishi, H., and Bansilal, S., "An exploration of high school learners' understanding of geometric concepts," Problems of Education in the 21st Century, vol. 77, issue 1, pp. 82-98, 2019. Doi: 10.33225/pec/19.77.82

[2] French, D., Teaching and learning geometry. London: Continuum, 2004.

[3] Ministry of Education. National report for trends in international mathematics and science study (TIMSS) 2019. Putrajaya: MOE, 2020.

[4] Mullis, Michael O. Martin, Pierre Foy & Alka Arora. TIMSS 2011 International results in mathematics in a: TIMSS & PIRLS International Study Center, Lynch School of Education, Boston Collage Chestnut Hill, MA, USA and International Association for the evaluation of educational achievement (IEA) IEA Secretariat Amsterdam, the Netherlands, 2012.

[5] Armah, R. B., and Kissi, P. S., "Use of the van Hiele Theory in Investigating Teaching Strategies used by College of Education Geometry Tutors," Eurasia Journal of Mathematics, Science and Technology Education, vol.15, issue 4, em1694, 2019. https://doi.org/10.29333/ejmste/103562.

[6] Gün, E. T., and Atasoy, B., "The effects of augmented reality on elementary school students' spatial ability and academic achievement," Egitim Ve Bilim, vol. 42, issue 191, 31-51, 2017. http://dx.doi.org/10.15390/EB.2017.7140

[7] Turgut, M., and Urgan, C., "Designing spatial visualization tasks for middle school students with a 3d modelling software: An instrumental approach," International Journal for Technology in Mathematics Education, vol. 22, issue 1, 45–51, 2015. DOI: 10.1564/tme_v22.2.01.

[8] Usiskin, Z. and Chicago Univ., I., Van Hiele Levels and Achievement in Secondary School Geometry. CDASSG Project, 1982.

[9] National Council of Teachers of Mathematics, Principles and standards for school mathematics. Reston, Virginia: National Council of Teachers of Mathematics, 2000.

[10] van Hiele, The child's thought and geometry, trans. by R. Tischler. Bulletin de l'association Des Professeurs de Mathematique de l'enseignment Public, 38e(198), 1–10, 1956.

[11] Crowley, M. L., The van Hiele model of the development of geometric thought. Learning and teaching geometry, K-12. In Lindquist, M. M., eds, Learning and teaching geometry, K-12, 1987 Yearbook of the National Council of Teachers of Mathematics (pp. 9-24), Reston, Va.: National Council of Teachers of Mathematics, 1987.

[12] Abdullah, A.H. and Zakaria, E., "Enhancing students' level of geometric thinking through Van Hiele's phase-based learning," Indian Journal of Science and Technology, vol. 6, issue 5, 4432-4446, 2013.

[13] Tan Tong Hock, "Effects of van hiele's phases of learning and theory of geometry thinking on geometry learning of malaysian year five students," Unpublished Theses: UTM, 2016.

[14] Yahya, F. H., Wahab, R. A., Atan, N. A. and Ibrahim, A. B., "The effects of video tutorial screencast SketchUp make (VTS-SUM) in learning 3D geometry for low achievers," Universal Journal of Educational Research, vol. 7, issue 10A, 19-23. DOI: 10.13189/ujer.2019.071704, 2019.

[15] Wahab, R. A., Abdullah, A. H. B., Abu, M. S. B., Mokhtar, M. B. and Atan, N. A., "A case study on visual spatial skills and level of geometric thinking in learning 3D geometry among high achievers," Man in India, vol. 96, issue 1, 489-499, 2016.

[16] Özdemir, S., "Supporting printed books with multimedia: A new way to use mobile technology for learning," British Journal of Educational Technology, vol. 41, issue 6, 135-138, 2010.

[17] Jaelani, A., "Geometric thinking in learning distance and angle," Journal of Physics: Conference Series, vol.1778, issue 012022, 2021. doi:10.1088/1742-6596/1778/1/012022

[18] Malaysian Examinations Syndicate. Critique of quality of answers in the 2010 malaysian certificate of education examination. Kementerian Pelajaran Malaysia, Putrajaya, 2010.

[19] Gravemeijer, K., Stephan, M., Julie, C., Lin, F. L., and Ohtani, M., "What mathematics education may prepare students for the society of the future?" International Journal of Science and Mathematics Education, vol. 15, issue 2017, 105–123, 2017. DOI 10.1007/s10763-017-9814-6.

[20] Başaran, M., Özalp, G., Kalender, I., and Alacaci, C., " Mathematical knowledge and skills expected by higher education in engineering and the social sciences: Implications for high school mathematics curriculum," Eurasia Journal of Mathematics, Science and Technology Education, vol. 11, issue 2, 405–420, 2015. https://doi.org/10.12973/eurasia.2015.1357a.

[21] Disbudak, O. and Akyuz, D., "The comparative effects of concrete manipulatives and dynamic software on the geometry achievement of fifth-grade students," International Journal of Technology in Mathematics Education, vol. 26, issue 1, 3-21, 2019. Doi: 10.1564/tme_v26.1.01.

[22] Gürbüz, M. C.; Ağsu, M. and Güler, H. K., "Investigating geometric habits of mind by using paper folding," Acta Didactica Napocensia, vol. 11, issue 3-4, 2018. DOI: 10.24193/adn.11.3-4.12.

[23] Ng, O.L.; Shi, L. and Ting, F.S.T., "Exploring differences in primary students' geometry learning outcomes in two technology-enhanced environments: Dynamic geometry and 3d printing," International Journal of STEM Education, vol. 7, issue 1, 2020. https://doi.org/10.1186/s40594-020-00244-1.

[24] Bidaibekov, Y., Grinshkun, V., Bostanov, B., Umbetbayev, K. and Myrsydykov, Y., "Al-Farabi's mathematical legacy and algorithmic approach to resolving problems regarding geometrical constructions in geogebra environment," Periodico Tche Quimica, vol. 17, issue 34, 599-620, 2020.

[25] Ministry of Education, Malaysia Educational Bluprint 2013 – 2025. Putrajaya: Kementerian Pendidikan Malaysia, 2012.

[26] Mishra, P. and Koehler, M. J., "Technological pedagogical content knowledge: A framework for teacher knowledge," Teachers College Record, vol. 108, 1017-1054, 2006.

[27] Yahya, F.H., Abas, H., and Yussof, R. L.," Integration of screencast video through qr code: An effective learning material for m-learning,". Journal of Engineering Science and Technology, vol. 13, Special Issue on ICETVESS 2017, 1–13, 2018.

[28] Zhang, D., Peng, X., Yalvac, B., Eseryel, D., Nadeem, U., and Islam, A., "Integrating student-made screencasts into computer-aided design education," Computer-Aided Design and Applications, vol. 14, 41–50, 2017. doi: 10.1080/16864360.2017.1308080

[29] Hanafi, H. F., Said, C. S., Wahab, M. H., and Samsuddin, K. Improving students' motivation in learning ICT course with the use of a mobile augmented reality learning environment. Bristol, United Kingdom: IOP Publishing, 2017. Doi: 10.1088/1757-899X/226/1/012114.

[30] Yeop, Mohd Azli; Yaakob, Mohd Faiz Mohd; Wong, Kung Teck; Don, Yahya; Zain and Farah Mohamad, "Implementation of ICT policy (blended learning approach): Investigating factors of behavioral intention and use behavior," International. Journal of Instruction, vol. 12, issue 1,767-782, 2019.

[31] O'Callaghan, F.V., Neumann, D. L., Jones, L., and Creed, P. A., "The use of lecture recordings in higher education: A review of institutional, student, and lecturer issues," Education and Information Technologies, vol. 22, issue 1, 399-415, 2017. https://doi.org/10.1007/s10639-015-9451-z

[32] Billings, D.M., Kowalski, K. and Smith, C.M., "The flipped classroom for professional development: Part II. Making podcasts and videos," The Journal of Continuing Education in Nursing, vol. 44, issue 11, 486-487, 2013.

[33] Duatepe, A. An investigation on the relationship between Van Hiele geometric level of thinking and demographic variables for preservice elementary school teachers. Yayınlanmamış Yüksek Lisans Tezi. Orta Doğu Teknik Üniversitesi Fen Bilimleri Enstitüsü, Ankara, 2000.

[34] Cohen, J. Statistical power analysis for the behavioral sciences (2nd ed.). New York: Academic Press, 1998.

[35] Md. Yunus, A. S., Mohd Ayub, A. F., and Hock, T. T., " Geometric thinking of Malaysian elementary school students. International Journal of Instruction, vol. 12, issue 1, 1095-1112, 2019.

[36] Pujawan, I. G. N., Suryawan, I. P. P. and Prabawati, D. A. A., "The effect of van hiele learning model on students' spatial abilities. International Journal of Instruction, vol. 13, issue 3, 461-474, 2020. https://doi.org/10.29333/iji.2020.13332a

[37] Uygan, C. and Kurtulus, A., "Effects of teaching activities via google Sketchup and concrete models on spatial skills of preservice mathematics teachers. Turkish Journal of Computer and Mathematics Education, vol. 7, issue 3,510-535, 2016. https://doi.org/10.16949/turkbilmat.273993