ATLANTIS PRESS
Advances in Engineering Research, volume 210
Conference on Broad Exposure to Science and Technology 2021 (BEST 2021)

Personal Storage with a Dual Security System Based on Arduino

Andika Febriansyah Gunawan[1], Pitoyo Yuliatmojo[1], Muhammad Yusro[1*]

[1]*Faculty of Engineering Universitas Negeri Jakarta, Jakarta Timur, Indonesia*
[*]*Corresponding author. Email: myusro@unj.ac.id*

ABSTRACT
This study aims to design the storage of personal with a dual security system based on Arduino microcontroller to minimize the occurrence of theft crimes without using violence. This research was conducted using engineering research methods. The results of this study are the first key is opened using the telegram application on the smartphone and the second key uses the fingerprint sensor. Telegram also functions as a notification when the safe has been opened and lifted so that it can detect when the safe is experiencing a theft attempt.

Keywords: *Dual Security System, Arduino, Microcontroller*

1. INTRODUCTION

The development in the world of crime in social life often occur by irresponsible people, so that it is very detrimental to society. According to the Central Bureau of Statistics in Indonesia, the crime that often occurs is the occurrence of crimes against personal items without using violence namely theft, theft by weight, theft of motor vehicles, vandalism/destruction of goods. Recorded in 2018 published by the Central Bureau of Statistics sourced from Village Potential Data Collection conducted by the Central Bureau of Statistics every 3 years about 11,42% - 73,76% from the entire province in Indonesia [1].

This is supported by several reports that have occurred in recent months, including a criminal case on July 23, 2020, a someone unscrupulous broke into a safe deposit belonging to a minimarket contain Rp. 23,474,715 and took the money away. The incident was discovered after the minimarket employee opened the shop at 06.00 a.m [2]. Therefore, I interested the research to design a dual security system deposit box that has even better security features and uses Microcontroller-based electronic circuit applications.

Some related research is research conducted by Annisya, et al (2017) to open and close a safe deposit door using a Fingerprint Sensor. However, if you forget to tap your finger on the Fingerprint, a micro switch is provided to lock the safe [3]. Then the research conducted by Yohannes Yahya, et al (2017) made a safe deposit security system using a keypad to enter a password and a Fingerprint Sensor to identify the fingerprint of the safe deposit owner [4]. Next research from Hafdiarsya Saiyar and Mohammad Noviansyah (2019) made a security system using a keypad to enter a PIN, if it is correct it will open, but if you enter the wrong PIN it will send an SMS notification to the smartphone owner of the safe deposit [5]. The development carried out by the researcher is to have a security system update on the safe deposit, namely use the telegram application as unlocking of the safe deposit, notify the note-taker when the safe deposit has been opened, and notification when the safe deposit has been brought or disturbed by someone else [6][7]. Added a detection feature when the safe deposit is lift using the GY521 Module so that the safe is safe enough if someone wants to disturb the safe deposit [8].

2. METHODS

The research method used in this research is the engineering method, which includes problem identification, product design, hardware and software design, data collection, and direct application in the field so that the tool can function properly in accordance with the working principles of the tool [9]. Following is a block diagram shown in Figure 1.

In Figure 1, there are 3 (three) main parts, namely input, process, and output. In the input section, the researcher uses the GY521 Sensor to detect the movement

of the safe deposit box, then the Telegram Software installed on the Smartphone to unlock the first safe deposit box using a combination of 6 numeric pins and equipped with a Keypad as a backup to open the first lock using a combination of 6 numeric pins if the Telegram software is not connected to the internet, and the last input is a Fingerprint Sensor to unlock both safe deposit boxes using fingerprints. The process section, using 2 microcontrollers that is Arduino Mega 2560 and Node MCU ESP8266, where the two microcontrollers are interconnected using Software Serial. In the output section, the researcher uses a buzzer that will sound if the safe is not in its position or if the combination of 6 number pins is wrong, then uses a 16x2 LCD as a text screen board, and 2 solenoid locks as the first and second locks which are controlled by a 5V relay driver.

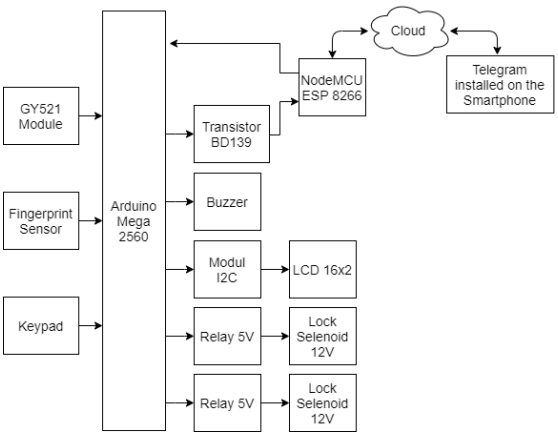

Figure 1. Block diagram of the system.

3. RESULTS AND DISCUSSION

3.1 The Design Results

In this dual security safe system for storing personal items based on Arduino, the hardware between the necessary components is already installed in the safe. The following is the physical form of a double security safe system in Figure 2.

Figure 2 The hardware of personal storage with a dual security system based on arduino microcontroller.

3.2 Results of Voltage Testing in Regulator Circuits

Testing the regulator circuit is used to determine whether there is a problem with the regulator and whether the battery used is full or not. The results of the voltage test on the regulator circuit can be seen in Table 1.

Table 1 Result testing in regulator circuits.

Variable	Criteria ±5%	Rated Voltage
V_{in}	10,5V – 11,6V	10,91V
V_{out}	4,75V – 5,25V	4,95V

In Table 1, the researcher uses 3 Li-Ion batteries that installed in series, where one Li-Ion battery has a capacity of 3.7V / 3A so that the total battery voltage is 11.1V / 3A. The battery is connected to the regulator circuit and then tested. The results of these tests with a tolerance of ± 5%, obtained that the battery and the regulator circuit are working well and are included in the tolerance value of ± 5%.

3.3 Results Testing Battery

The battery which will be use tested resistance in discharging from the battery. Following are the test results shown in Table 2.

Table 2. Results testing battery.

Battery voltage when full	Battery voltage when discharged	Duration of Use	Safe Deposit Use
11,5V	8,5V	23:00:00	12x

In Table 2, the battery lasts for 23 hours because the battery is in full condition and finished charging. The safe deposit use has been tested 12 times. This shows that the battery can work optimally and is durable enough so that the safe can work optimally [10].

3.4 Results of Testing in Driver Relay Circuits

The researchers used two-channel relays to activate the Solenoid Lock that functions to open the safe deposit door. The following are results of relay driver testing in Table 3 and Table 4.

Table 3 Results of testing driver relay channel 1.

Variable	Results of Testing	Condition
Vin Coil	4.88V	Good
Vin HIGH	4,7V	Good
Vin LOW	28,6mV	Good
V Common	11,06V	Good

Table 4 Results of testing driver relay channel 2

Variable	Results of Testing	Condition
Vin Coil	4.88V	Good
Vin HIGH	4,7V	Good
Vin LOW	27,2mV	Good
V Common	11,06V	Good

In the Table 3 and Table 4, the results relay driver test shows when the relay gets HIGH logic, the relay can drain the voltage, and the switch on the relay changes position from NC pin (Normally Close) to pin NO (Normally Open). Conversely, when the relay gets LOW logic, the relay cannot drain voltage and the switch on the relay does not change positions. This shows the relay driver circuit can work properly.

3.5 Results of Testing Input and Output

The first input and output test use a Fingerprint Sensor as input then LCD and Buzzer as output. The test results are shown in Table 5.

Table 5 Results of testing fingerprint sensor with lcd and buzzer.

Finger Sample	Response Time	Buzzer (ON/OFF)	Results
Thumb Finger	01,23 s	OFF	“Success”
Index Finger	01,31 s	OFF	“Success”
Middle Finger	01,32 s	OFF	“Success”
Ring Finger	01,24 s	ON	“Try Again”
Little Finger	01,30 s	ON	“Try Again”

In Table 5, it shows the Fingerprint Sensor can function because registered fingerprints can be detected by the words "Fingerprint Read" appears on LCD, and Buzzer OFF, however not registered fingerprints cannot be detected by the words "Try Again" appears on LCD, and Buzzer ON. The second input and output test results use the Keypad as input in the form combination PIN then Lock Solenoid and LCD as output, the results of the test table are shown in Table 6

Table 6 Results of testing keypad with lock solenoid and LCD

Combination PIN	Lock Solenoid (ON/OFF)	Results
123456	OFF	“Wrong Password”
137265	ON	“True Password”
324567	OFF	“Wrong Password”

In Table 6, show that if the keypad is pressed correct combination number, the words "True Pass-word" will appear on LCD, and Lock Solenoid is ON, when if the Keypad is pressed the wrong combination number will appear "Wrong Password" on LCD, and Lock Solenoid OFF. The third input and output test results use the GY521 Module as input then LCD and Buzzer as output, the results of the test table are shown in Table 7.

Table 7 Results of testing GY521 module with LCF and buzzer.

Variable	Buzzer (ON/OFF)	Results
5 cm	OFF	“No Sensor”
10 cm	OFF	“No Sensor”
15 cm	ON	“Sensor Active”
20 cm	ON	“Sensor Active”

In Table 7, shows that the GY521 Module can function to measure the height of the sensor. When the sensor detected the expected height, the Buzzer is ON and the LCD says, "Sensor Active". If the height doesn't match, the Buzzer is OFF and the LCD says, "No Sensor".

3.6 Telegram Application Test Results

Next is to test the Telegram application that is already installed on a smartphone as input then Lock Solenoid 1 as output, the test table is shown in Table 8.

Table 8 Test Results of telegram software with lock solenoid 1.

Message Content	Message Duration	Results
/start	21 s	“Telegram ON” Lock Solenoid OFF
	11 s	
	25 s	
/123456	27 s	“Telegram ON” Lock Solenoid OFF
	26 s	
	28 s	
/137265	21 s	“Telegram ON” Lock Solenoid ON
	25 s	
	25 s	
/324567	24 s	“Telegram OFF” Lock Solenoid OFF
	24 s	
	24 s	

In Table 8, it shows that if the combination of numbers typed is appropriate, then the Lock Solenoid will be

ON, but if the combination of numbers typed is not correct, then the Lock Solenoid will be OFF. However, the length of the telegram process of sending messages to the system really depends on the signal conditions, if the signal is in good condition, the process will be fast.

3.7 Double Security System Test Results Safe

Testing of the safe dual security system aims to ensure that the security system works properly and does not experience errors in operating the telegram system and software. The following are the test results of the safe double security system shown in Table 9 and the results of the telegram notification test in Table 10.

Table 9 Test Results of safe dual security systems.

Input	Item	Lock 1	Lock 2	Buzzer
Tele-gram	/137265	ON	-	-
	/324567	OFF	-	-
Keypad	137265	ON	-	-
	324567	ON	ON	-
Finger-print	Index Fin-ger	-	ON	OFF
	Little Fin-ger	-	OFF	ON
Modul GY521	Lifted Up	-	-	ON
	No Lifted Up	-	-	OFF

Table 10 Telegram notification test results.

Message Content	Receive Mes-sage		Noted
	Yes	No	
/Start	√		Type /start
/137265		√	Type /137265
Receive Safe De-posit Unlocked noti-fications	√		Safe Deposit opens
Safe Deposit is not in normal position	√		Alarm Notifi-cation Sounds

In Table 9 and Table 10, it shows that the system can work properly because to open the first lock you can use telegram software, but if the telegram software is not connected to the internet, then the Keypad can be used to unlock 1 according to table IX using the code 137265, while the Fingerprint Sensor can function to unlock both. The GY521 module can detect when the safe is not in the initial position.

Telegram software also gets notifications according to the program created and conditions that occur in the safe such as the safe has been opened and the safe position is abnormal or changed position. To re-lock the safe using the keypad by pressing the code 324567 then the hard lock and the second will be locked. The results of this design are connected to the internet using the telegram application and the safe can be detected if the safe is opened by another person without the owner's permission remotely.

4. CONCLUSION

The double security system of the safe can be opened if you type a combination of numbers and tap the fingerprint correctly and accordingly. If the safe is opened by someone else, it will be immediately known because there is a sufficient security system to provide notification in the form of a sound alarm or notification from the telegram software. The inputs and outputs used have been tested and work properly according to their functions used in this double security safe system. The Li-Ion battery that is used has also been tested and the voltage on the battery is in accordance with the capacity stated on the Li-Ion battery.

ACKNOWLEDGMENT

This work was supported by Faculty of Engineering, Universitas Negeri Jakarta. The authors would like to thank for some anonymous reviewers for their constructive comments and insightful suggestions that improved the quality of this paper.

REFERENCES

[1] Badan Pusat Statistik 2019 *Statistik Kriminal 2019*
[2] T Mantovani 2020 *Jebol Plafon Minimarket, Maling Bawa Kabur Uang Dalam Brankas Rp 23 Juta klikjaktim.com* Mojokerto, July 29, 2020
[3] Annisya L, Hermanto, and R Candra 2017 *Sistem Keamanan Buka Tutup Kunci Brankas Menggunakan Sidik Jari Berbasi Arduino Mega* Jurnal Informatika dan Komputer vol. **22** no. 1 pp. 1–9, 2017 doi: 10.1021/acs.est.7b01094
[4] Y Yahya, T W Wisjhnuadji, and N Arunkumar 2017 *Automatic safe deposit box security system using Arduino Uno* J. Adv. Res. Dyn. Control Syst vol. **9** no. 16 pp. 806–819, 2017
[5] H Saiyar and M Noviansyah 2019 *Sistem Informasi Keamanan Brankas dengan Mikrokontroler Atmega 16* Jurnal Akrab Juara vol. **4** no. 1 pp. 16–25, 2019
[6] M W Tobias 2000 *Locks, Saves, and Security*, 2nd ed. Springfield, Illinois, U.S.A: Charles C Thomas, 2000.
[7] M Yusro, N A Guntoro, and Rikawarastuti 2021

Utilization of microcontroller technology using Arduino board for Internet of Things (a systematic review) AIP Conf. Proc vol. **2331** pp. 1 6 2021 doi: 10.1063/5.0041705

[8] A Baihaqi, W Djatmiko, and M Yusro 2019 *Development of smart and safe-bags for children based on microcontroller* J. Phys. Conf. Ser. vol. **1402** no. 4 2019 doi: 10.1088/1742 6596/1402/4/044017

[9] G Muller 2013 *Systems engineering research methods* Procedia Comput. Sci. vol. **16** pp. 1092 1101 2013 doi: 10.1016/j.procs.2013.01.115

[10] *18650 Lithium Ion Battery* Shenzhen Aweite Technology. https://aweitebattery.en.alibaba.com/product/1492 0924190/e_cigarette_18650_battery_18650_3000 mAh_3_7V40A_ith_paypal_acceptable_18650_l