Application of Machine Learning Algorithms in Financial System Risk

Wenjing Huang(✉), Xiao Chen, and Liyuan Wang

Jiangxi College of Applied Technology, Ganzhou 341000, China
Huangwenqing2022@outlook.com

Abstract. Aiming at the problems of low accuracy rate and recall rate and poor completion of recommended paths in enterprise financial risk prediction methods, based on machine learning algorithms, a method of enterprise financial risk prediction based on collaborative filtering is proposed. Build the overall architecture based on historical financial data resources, design the financial risk data processor and the financial risk intelligent recommender, and complete the design of the system hardware and software; in the system software design, the characteristics of the enterprise's financial risk are used as the identification criteria to calculate the risk that meets the risk. By using the collaborative filtering algorithm, the intelligent recommendation model of enterprise financial risk is constructed to realize the intelligent recommendation of risk. The system test results show that this study can be used for the recommendation analysis of enterprise financial risk while improving the accuracy and recall rate of risk identification.

Keywords: Machine Learning · Corporate Financial Risk · Forecasting

1 Introduction

With economic growth entering a new normal, the formulation and implementation of new policies and the development of new technologies, businesses are faced with more and more uncertainty. Economic globalization has higher and higher requirements for enterprises' financial risk early warning capabilities. Many enterprises are weakened and even bankrupt because of financial risks [1]. The emergence of enterprise financial risk is not sudden or accidental, but after long-term accumulation and action, usually a process of accumulation, germination, evolution, approach, prominence and action. If enterprises fail to detect their own financial risks early and take effective measures to deal with them, they may face greater losses and may even lead to bankruptcy [2, 3]. Generally speaking, companies with low financial risk early warning capabilities are more affected by adverse events such as the global financial crisis, and are more likely to experience financial crises or even bankruptcy. Conversely, companies with high risk early warning capabilities are less likely to experience financial crises. The financial risk status of an enterprise reflects the management ability of managers and is an important indicator for investors to evaluate managers' performance [4, 5]. Enterprises with low probability of occurrence of risk status and controllable risks have higher management ability of managers, and

D. Qiu et al. (Eds.): ICBBEM 2022, AHIS 5, pp. 262–269, 2023.
https://doi.org/10.2991/978-94-6463-030-5_28

the development trend of enterprises is relatively good. Investors are more inclined to invest in companies with sound financial positions, rather than simply choosing large-scale companies. Financially distressed businesses will lose investor support and face increased pressure from creditors [6–8]. Enterprises with good financial status are more likely to be favored by various stakeholders, and the development of enterprises will be smoother. A scientific and effective financial risk early-warning system will help managers to discover possible problems of the enterprise in a timely manner, understand the risk status of the enterprise, and formulate risk early-warning measures and risk response plans as soon as possible. Although there are many qualitative and quantitative methods for establishing enterprise financial early warning model at this stage, only on the basis of fully clarifying early warning theory and comparing various early warning methods, can a more accurate early warning method for the enterprise be selected. Therefore, it is very important to establish a scientific enterprise financial risk early warning system, to give early warning to enterprise financial risks, and to formulate appropriate risk response strategies according to the results of risk early warning [9, 10].

By reviewing the relevant literature on financial risk and financial risk early warning, we found that the research on financial early warning started earlier in foreign countries, and foreign scholars have also proposed many financial risk early warning theories and models, which can not be ignored for our further research on early warning models of reference. The research process of foreign scholars on financial risk and its early warning model is generally from a single evaluation index to a multi-level evaluation model, from the initial multiple regression model to a more advanced linear probability model, until it breaks through the limitations of traditional methods. A neural network-like model. The concept of risk management can be traced back to the period of the Industrial Revolution. Henri Fayol put forward the definition of risk management and successfully applied this concept to the operation and management of enterprises, which has greatly contributed to the development of the concept of financial risk. Later, scholars made more comprehensive research on financial risk early warning [11].

In the 1980s, Chinese scholars began to have more access to foreign advanced ideas. After realizing the necessity of conducting research on financial risk, domestic scholars began to actively explore. In the 1990s, scholars Wu Shinong and Huang Shizhong wrote the article “Analytical Indicators and Predictive Models of Enterprise Bankruptcy”, which explained the financial indicators for predicting enterprise bankruptcy and introduced its early warning model, which laid the foundation for future research. The three scholars Zhou Shouhua, Wang Ping and Yang Jihua introduced the F-score prediction model. The advantage of this model is that the indicators are comprehensively updated and a larger sample size is selected, which is a perfection of the Z-score relative model. By controlling for other variables, Chen Jing selected 27 ST companies and 27 non-ST companies to study their financial statements for the three years after 1995. Through univariate decision analysis, she found that there are four indicators that can predict financial status more scientifically, including return on total assets, current ratio, asset-liability ratio and return on equity. Through multivariate linear judgment analysis, 6 financial indicators with more accurate prediction rates were obtained, and the financial crisis of ST Company was accurately predicted 3 years ago [12].

2 Model Building

The enterprise financial historical data resource processor is to provide the required risk determination criteria for the data in the later enterprise financial operation process, and help it quickly obtain the required resource information, which requires a large amount of historical and newly integrated data as the basis, data processing The interface circuit of the device is shown in Fig. 1.

According to Fig. 1, in the interface circuit of the enterprise financial risk processor, the nRF905 chip is used to realize the communication function of the resource processor. This chip not only has super transmission capability, but also has high-speed data transmission capability. At the same time, the chip is equipped with 1024 communication channels, which can realize the integration requirements of resources. The processing time of its resource processor is ≤6 μs, and the working voltage range is 1.9V–3.6 V during the working time, and the working current is controlled at 12.5 μA It is a low-power working state and can process multiple search requests at the same time.

On the basis of data acquisition and processing in Fig. 1, an in-depth analysis shows that financial risk data is objective, it exists in the process of enterprise operation and management, and is usually caused by the loss of solvency of the enterprise or the decline of investment income. Therefore, managing financial risks, optimizing financial structure and adopting diversified financing methods are important contents of financial risk management. Financial risks are divided into two categories, namely narrow financial risks and broad financial risks. Financial risk in a narrow sense is the uncertainty of loss, which may be caused by the inability of the company to normally repay its due debts. Financial risk in a broad sense, in addition to the definition of financial risk in the narrow sense, also includes the uncertainty of income, which is caused by the capital behavior of the enterprise, because the capital behavior of the enterprise may not only bring benefits to the enterprise, but also loss may result. When faced with such uncertainty brought about by financial risks, enterprises generally cannot completely eliminate them, and can only take certain measures to reduce this uncertainty as much as possible, thereby reducing the financial risks that the enterprise may face. From the perspective of financial risk management, establish a risk prediction and early warning model.

In the process of calculating the similarity between the financial risk degree of the current enterprise and the financial risk of the historical enterprise, the characteristic attribute is used as the matching standard to obtain the similarity between the attributes. The attribute shortest path calculation formula is as follows:

$$\text{ShortestPath}(\gamma_2, \gamma_1) = \begin{cases} \text{ShortestPath}\ (\gamma_2, \gamma_1) \\ 1 \quad (if\ \gamma_2 \in \lambda\phi_i \text{ and } \gamma_1 \in \lambda\phi_i) \\ 0 \quad (if\ \gamma_2 = \gamma_1) \end{cases} \tag{1}$$

The definition formula for obtaining the risk correlation degree is:

$$KCD(\gamma_2, \gamma_1) = \begin{cases} \frac{in|\gamma_2|}{\text{ShortestPath}(\gamma_2, \gamma_1)} \\ 0 \quad (if\ \text{ShortestPath}\ (\gamma_2, \gamma_1) = 0) \end{cases} \tag{2}$$

It can be seen from the above formula that when the shortest distance from the risk point to the target is not equal to zero, the correlation degree is the similar shortest

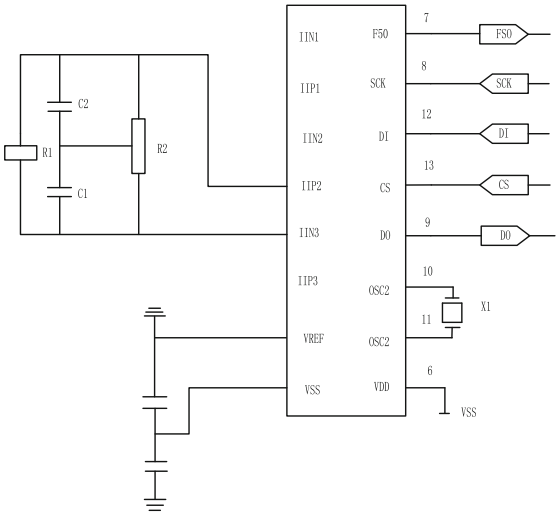

Fig. 1. Data processing

distance. When the shortest distance between the risk point and the target is zero, it means that the risk point and the target do not have the same risk. Similarity is set to 0.

The steps of collaborative filtering algorithm to build an intelligent financial risk recommendation model are as follows:

Step 1: Classify the historical text data, extract the features in the enterprise financial risk database with TextRank, use the vector to map, and get the initial risk level as follows:

$$\gamma_i = \{\omega_{i1}, \omega_{i2}, \ldots, \omega_{in}\} \tag{3}$$

Step 2: According to the historical search behavior, obtain the user's past risk and build the available resource model. The user resource library can be expressed as:

$$\lambda(\xi) = \{\lambda\gamma_1, \lambda\gamma_2, \ldots, \lambda\gamma_n\} \tag{4}$$

When an enterprise conducts a risk level search, it will add the searched risk points to the user resource library. The user resource library represents the user's cognitive level of the enterprise's financial risk. According to the cognitive level of the risk point, the available risk resources are recommended.

Step 3: Calculate the similarity between each user's risk points and resources according to the collaborative filtering algorithm. The similarity in this process represents the recommendation information of risk resources.

Step 4: Perform weighted fusion processing on the similarity of the obtained risk level resources to obtain the resource connection degree, and use the collaborative filtering algorithm to recommend the risk point resources with the highest degree of connection to the user.

Through the above process, an intelligent recommendation model for enterprise financial risk resources is constructed, which is expressed as:

$$W_{\xi,\varpi} = \overline{R_{\xi}} + \frac{\sum\limits_{\sigma \in s(\xi)} \left(R_{\sigma,\varpi} - \overline{R_{\varpi}}\right) \cdot \mathrm{sim}(\xi, \sigma)}{\sum\limits_{\sigma \in s(\xi)} |\mathrm{sim}(\xi, \sigma)|} \tag{5}$$

In order to verify the recommendation effect of the risk method in this paper, the accuracy rate, the recall rate and the completion degree of the recommended path are selected as the evaluation indicators, and the calculation formula is as follows:

$$A = \frac{TP + TN}{TP + FP + FN + TN} \tag{6}$$

$$D = \frac{TP}{TP + FN} \tag{7}$$

In the formula, A indicates the accuracy rate,D indicates the recall rate, TP indicates the amount of correctly recommended resources, TN indicates the amount of other data recommended correctly, FP indicates the amount of resources that are incorrectly recommended, FN indicates the amount of resources that are not recommended.

The higher the accuracy and recall rate of the method, the higher the precision in the application process, the better the effect, the higher the completion of the recommended path, the higher the success rate of teaching resource recommendation, and the better the recommendation.

3 Experiment

In order to highlight the effect of the recommendation system in this paper, a demand-based risk recommendation system and a HIN-based risk recommendation system are introduced, and the two methods are compared with the recommendation system proposed in this study to test the accuracy of recommending English video teaching resources, recall rate and recommended path completion degree, the results are as follows:

(1) The system compares the test results of the accuracy rate of enterprise financial risk resource recommendation as shown in Fig. 2.

According to the results shown in Fig. 2, when the demand-based risk recommendation system and the HIN-based risk recommendation system are used, the resource recommendation accuracy rate is below 80%, while when the system recommends risk resources in the text, the recommendation accuracy rate is above 80%. The system can use the collaborative filtering algorithm to filter out the useless information of the risk level, and improve the accuracy of the recommendation.

(2) The test results of the recommended recall rate of enterprise financial risk resources compared by the system are shown in Fig. 3.

From the results in Fig. 3, it can be seen that in the recall rate test, both the demand-based recommendation system and the HIN-based recommendation system are below

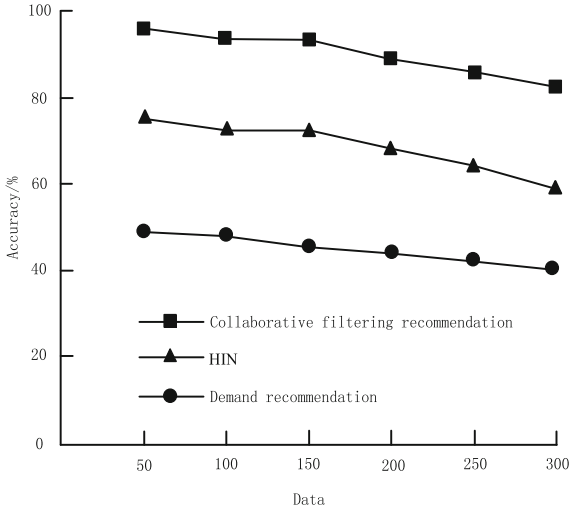

Fig. 2. Accuracy Analysis

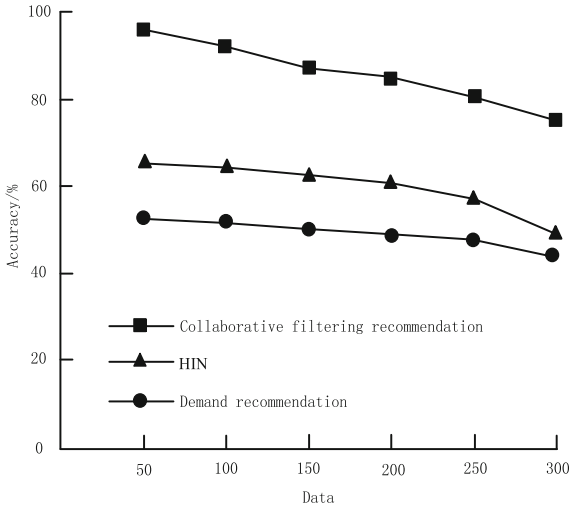

Fig. 3. Process Analysis

70%. When the number of users is less than 250, the recall rate of enterprise financial risk resources recommendation When the number of users exceeds 250, the recommended recall rate is lower than 80%, but it is still higher than the required recommendation system and HIN-based recommendation system, indicating that the recommendation effect of enterprise financial risk proposed in this study is better.

4 Conclusion

This paper proposes a machine learning-based enterprise financial risk prediction method. The main conclusions are as follows:

The system builds an intelligent recommendation model through the design of hardware and software, and uses collaborative filtering algorithm to realize the recommendation of enterprise financial risk resources. The experimental test found that the system has better recommendation effect when recommending enterprise financial risk resources.

References

1. Li Aiguo. Research on enterprise financial risk early warning in the era of big data [J]. China Management Informatization, 2021, 24(01): 72–73.
2. Chen Shaolong. Discussion on the related issues of the construction of corporate financial risk internal control [J]. China Business Review, 2020(20):143–144. https://doi.org/10.19699/j.cnki.issn2096-0298.2020.20.143.
3. Lv Xuejing, Chen Zhibin, Li Dongyang, Wang Shiyu. Government Regulation and Corporate Financial Risk: Empirical Evidence from Chinese A-Share Listed Companies [J]. Accounting and Economic Research, 2020, 34(05): 56–67. https://doi.org/10.16314/j.cnki.31-2074/f.20201204.001.
4. Pang Wenhui. Cause analysis and countermeasures of corporate financial risks [J]. Finance and Accounting Learning, 2020(21):12–13.
5. Chen Qiuyang. Research on the Causes of Enterprise Financial Risks and Management and Control Ideas [J]. Finance and Economics, 2020(16):146–147.
6. Ji Wei. Research on corporate financial risks and internal control measures under the background of big data [J]. Contemporary Accounting, 2020(05): 155–156.
7. Shi Li, Lu Jie. The construction idea of enterprise financial risk index system [J]. China Business Theory, 2019(23):190–192. https://doi.org/10.19699/j.cnki.issn2096-0298.2019.23.190
8. Zhou Yi, Zhang Youtang. Research on Dynamic Early Warning of Financial Risks of Zombie Enterprises Based on Kalman Filter [J]. Finance and Accounting Communications, 2019(23):110–114. https://doi.org/10.16144/j.cnki.issn1002-8072.2019.23.024.
9. Wang Weiran, Xu Shaorong, Pan Lichen. Analysis of the causes of financial risks in brewing enterprises based on a multidisciplinary perspective [J]. Brewing Science and Technology, 2019(07): 122–127. https://doi.org/10.13746/j.njkj.2019081.
10. Ji Yunteng, Zhou Bo, Zhang Yayun. Research on Enterprise Financial Risk Early Warning Based on OWA-FCE [J]. Value Engineering, 2019, 38(11): 66–69. https://doi.org/10.14018/j.cnki.cn13-1085/n. 2019.11.021.
11. Xu Wei, Xiao Zhi. Nonlinear characteristics of the impact of internal control on corporate financial risk: theoretical deduction and empirical test [J]. Modern Finance (Journal of Tianjin University of Finance and Economics), 2019,39(03):68–82. https://doi.org/10.19559/j.cnki.12-1387.2019.03.006.
12. Zhang Lei. Research on Financial Risk Early Warning System of Daily Chemical Enterprises [D]. Lanzhou University of Technology, 2018.