IoT-Based Temperature and Humidity Real-Time Monitoring System for Beekeeping Using LoRa Technology

Muhammad Irfan Mohd Pikri[1], Siti Azlida Ibrahim[1](✉), Nur Mimi Syaheeda Mohmad Faisal[1], Mohd Zulkifli Mustafa[2], and Sarina Mansor[1]

[1] Faculty of Engineering, Multimedia University, 63100 Cyberjaya, Selangor, Malaysia
azlida@mmu.edu.my

[2] Department of Neurosciences, School of Medical Sciences, Health Campus, Universiti Sains Malaysia, 16150 Kubang Kerian, Kelantan, Malaysia

Abstract. In stingless beekeeping, monitoring the temperature and humidity in the beehive is crucial to increase the honey yield and ensure the survival of the bee colony. However, the conventional method of checking the beehive is laborious and time-consuming. This paper proposes an IoT-based real-time remote monitoring system that enables the beekeeper to monitor the temperature and humidity in the beehive using their smartphone from anywhere and at any time. The system uses low-power wide-area network (LPWAN) technology, long-range (LoRa), to transmit the data from the sensor node at the beehive to the cloud via a LoRa gateway. The connectivity test shows that the gateway can receive the sensor data at a maximum of 205 m from the node with a line-of-sight connection. However, the LoRa signal is highly affected by the surrounding obstruction. A high number of obstructions caused the LoRa signal to degrade drastically, hence does not reach the gateway. Therefore, the current prototype works well in the environment with fewer obstructions, and the distance between the node and the gateway is less than 205 m.

Keywords: Stingless Bee · Internet of Things (IoT) · Long Range (LoRa)

1 Introduction

Beekeeping is one of the agriculture industries with a high potential in generating Malaysia's economy. The commercialization of the stingless bees' after-products such as honey, bee pollen, and propolis is growing. However, the local beekeepers are still implementing the traditional method of beekeeping, which limits the potential of the local honey industry to be commercialized worldwide. The old and traditional beekeeping systems cannot give a high yield of honey production because the bee colonies' condition inside the hive is not adequately monitored.

One of the challenges for stingless beekeeping in Malaysia is the hot and humid climates. When the climate is too hot, it causes the honey pots made of propolis wax to melt and leak, which will attract predators to attack the bee colony. Besides, high

M. Y. bin Alias (Ed.): MECON 2022, AER 214, pp. 334–342, 2023.
https://doi.org/10.2991/978-94-6463-082-4_29

temperatures will cause infertility in bees. Meanwhile, a too humid environment will promote mould growth inside the beehive, reducing the bees' productivity [1]. Therefore, it is crucial to monitor the temperature and humidity in the hive. Lack of adequate monitoring will cause a considerable loss to the beekeepers if they are unaware of the alarming situation inside of the beehive due to high temperature and high humidity. The traditional monitoring method requiring the beekeepers to check the beehive manually is less efficient as it consumes much time to cover a whole farm. This method will also require additional human labor, which eventually increases the total operational costs.

LPWAN is the best option for outdoor IoT applications such as smart farming and beekeeping that utilize energy-efficient sensor nodes to transmit signals at a low data rate. This technology is suitable for monitoring parameters such as temperature and humidity that do not fluctuate rapidly. Among the LPWAN technology available are LoRa, Sigfox, NB-IoT, and LTE-M [2][3][4]. NB-IoT and LTE-M utilize licensed spectrum. Meanwhile, LoRa and Sigfox utilize an unlicensed spectrum. Sigfox only covers certain cities and requires a subscription. Therefore, LoRa receives greater attention for quick deployment.

A few groups of researchers in Malaysia have proposed a few solutions to this problem using IoT platforms. In [5], a system with temperature, humidity, and weight sensors was proposed. The sensor data is sent to the cloud storage using a Wi-Fi connection. Meanwhile, another temperature and humidity monitoring system with GPS was proposed in [6]. Their system also uses a Wi-Fi connection to send data to the cloud. Since Wi-Fi connectivity range is limited, the beehive must be located near a premise with the Wi-Fi access point. Therefore, the proposed solutions are limited to a small-scale beekeeping activity near a premise.

This paper presents an IoT-based temperature and humidity monitoring system using LoRa connectivity technology. It is suitable for small-scale and medium-scale beekeeping activities, with the beehive located several hundred meters from a premise.

2 Proposed System

The proposed system consists of three parts, which are sensor node part, gateway part, and user part. The node part is equipped with a sensor and attached to the beehive to collect all the required information and transmit the recorded data wirelessly to a centralized system through the LoRa connection. The gateway part is considered the centralized system, which is used to receive the recorded data from the node part and process it before saving it into a cloud server through a Wi-Fi network. The user part consists of a mobile application and a web dashboard where all the recorded data are displayed.

2.1 Sensor Node Part

The schematic diagram of the node part is shown in Fig. 1. A NodeMCU ESP32 microcontroller is interfaced with an SX1278 Ra-02 LoRa module as the LoRa transmitter. The microcontroller functions to control the overall process of the system, while the LoRa transmitter functions to transmit the measured data wirelessly to the LoRa receiver at the

gateway part. A DHT22 sensor is used to measure the temperature and humidity inside the beehive. As for the power source, a solar panel with a charging module generates electricity to charge two 3.7 V Lithium-ion rechargeable batteries.

As for the power supply design, a 6 V solar panel and two 18650 lithium-ion batteries are connected to the TP4056 charger module at its respective terminal input. A single 1N4007 diode is used at the positive terminal of the solar panel to ensure the current is flowing in one direction only to the charger module. The output of the TP4056 charger module is then connected to the input of the MT3608 DC booster to provide a stable output voltage of 5.5 V as the input voltage of the NodeMCU ESP32. A switch is placed between the MT3608 DC booster VOUT+ pin and VIN pin of NodeMCU ESP32 so that the system can be turned on and off physically by the user.

In order to monitor the status of batteries level, two 10 KΩ resistors were used to provide a voltage divider network from the positive output voltage of the TP4056 charger module to an input pin of the NodeMCU ESP32. Most lithium-ion batteries have a maximum voltage of 4.2 V and a minimum of 2.8 V. Since the NodeMCU ESP32 input pin can only support a maximum voltage of 3.3 V, a voltage divider network is needed to lower the input voltage of the batteries.

2.2 Gateway Part

The gateway part consists of the NodeMCU ESP32 and SX1278 LoRa modules, as shown in Fig. 2. The NodeMCU ESP32 has a built-in Wi-Fi module that provides a Wi-Fi connection to the system. It acts as the system's central controller and facilitates the data flow in the overall IoT system. The function of the LoRa module is to receive the transmitted sensory data from the node part. In this system, a single channel gateway is used. The received data will be sent to a cloud server through the Wi-Fi network so that later, this data can be fetched by the mobile application and web dashboard. This system is powered by a DC power adapter connected to the home wall socket as the gateway part is placed inside the beekeeper's house, which is inside the coverage of the Wi-Fi access point. In addition, an LED was integrated into the gateway system to serve as the system's power indicator, allowing the user to be notified of the system's power status or when it is not functioning.

2.3 Web Dashboard and Mobile Application

Blynk web dashboard is one of the popular IoT platforms and can be integrated with its mobile application, the Blynk IoT apps. The purpose of the Blynk dashboard is to visualize received data from the gateway part in any web browser. On the dashboard, as shown in Fig. 3(a), the user can view three types of data: temperature, humidity, and battery percentage. Temperature and humidity data provide user information on the real-time temperature and humidity value inside the beehive. Next, the battery percentage data would provide the battery level status.

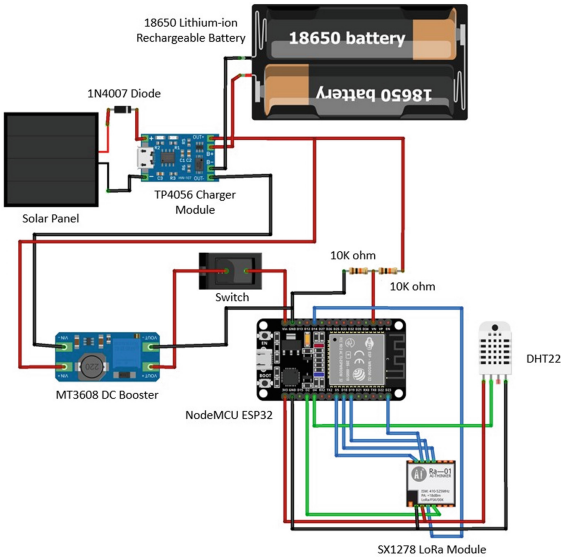

Fig. 1. Schematic diagram of the node part

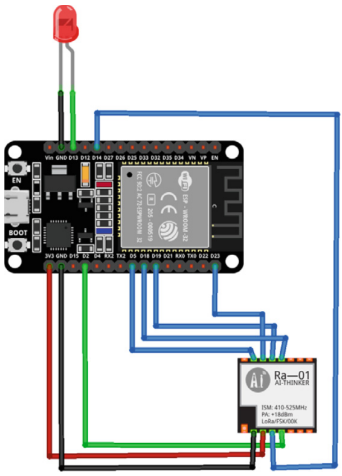

Fig. 2. Schematic diagram of the Gateway part

In the mobile application, as shown in Fig. 3(b), a similar configuration of data and widgets as in the Blynk web dashboard were presented to the user, which are the values of temperature, humidity, and battery percentage. The mobile dashboard includes three types of widgets: a label widget for displaying temperature value, gauge widget for displaying humidity and battery percentage values, and a graph widget to provide information on the past historical data.

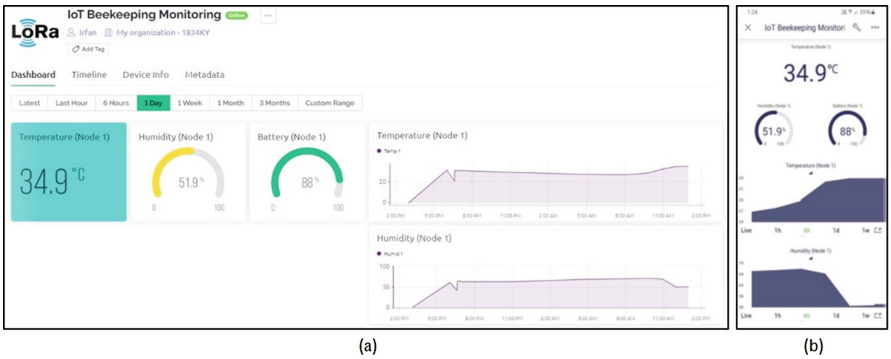

(a) (b)

Fig. 3. (a) Blynk IoT Web Dashboard and (b) Blynk IoT Mobile Apps Interface

3 Results and Discussions

The proposed prototype was assembled and tested in Multimedia University (MMU) Cyberjaya campus. Mustafa-Hive, a patented stingless beehive invented by [1], was used to test the prototype. The sensor node powered by a rechargeable battery and solar panel is attached to the hive, as shown in Fig. 5. In order to evaluate the performance of the developed prototype, several experimental tests were conducted, which were LoRa network connectivity test, temperature and humidity of DHT22 sensor test, and battery power endurance test.

3.1 LoRa Connectivity Test

The connectivity test was conducted to determine the device communication range from the node to the gateway. Three parameters were measured: the Received Signal Strength Indicator (RSSI), Signal-to-Noise Ratio (SNR), and the number of received packets. RSSI indicates the incoming signal strength at the receiver, and SNR is the ratio of the desired signal strength to the level of background noise. A higher RSSI and SNR value indicate a better signal performance. Meanwhile, a higher number of received packets indicates less no. of data loss. The tests were conducted and observed under two conditions: line-of-sight (LOS) and non-line-of-sight (NLOS). The LOS test aims to determine the maximum range coverage of the LoRa communication network when there is no building obstruct between the sensor node to the gateway. The test was conducted in an open space within Multimedia University, Cyberjaya campus. The node was placed in a fixed location while the gateway device was moved away from the node device for each 50 m interval until the maximum detectable distance was reached (Fig. 4).

The purpose of the NLOS test is to study the effect of the LoRa signal when the communication path is obstructed. This test was conducted at several places within the campus. The node device was placed in a hostel room, while the gateway was brought to several testing locations.

Figure 5 shows the result of the LOS test. The maximum detectable distance of the LoRa communication network in the outdoor environment was 205 m with the RSSI

Fig. 4. Sensor Node attached to Mustafa-Hive

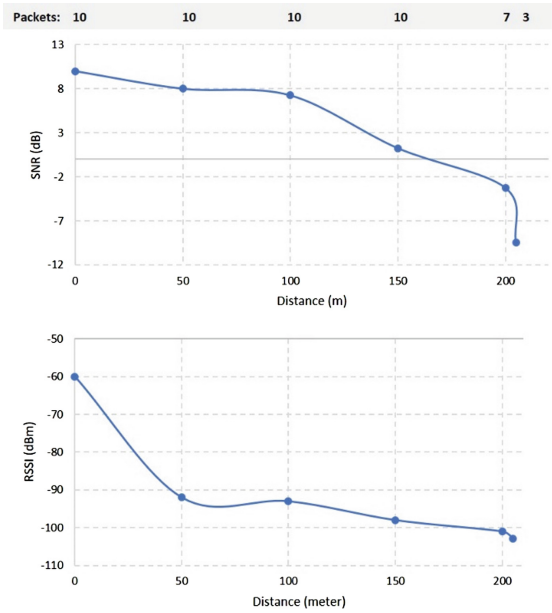

Fig. 5. Line-of-sight (LOS) test result

value of −103 dBm and SNR value of −9.50 dB. At this location, only 3 out of 10 packets were received. The degradation of the LoRa signal can be observed in the decreasing value of RSSI, SNR, and the number of received packets over distance. Moreover, the SNR value shows that the LoRa signal works below the noise floor when the distance is above 200 m.

Figure 6 shows the result of the NLOS test. Comparing the NLOS result with the LOS, the signal level decreased more drastically in the NLOS case. It is because the LoRa signal from the sensor node is highly attenuated as it passes through obstructions such

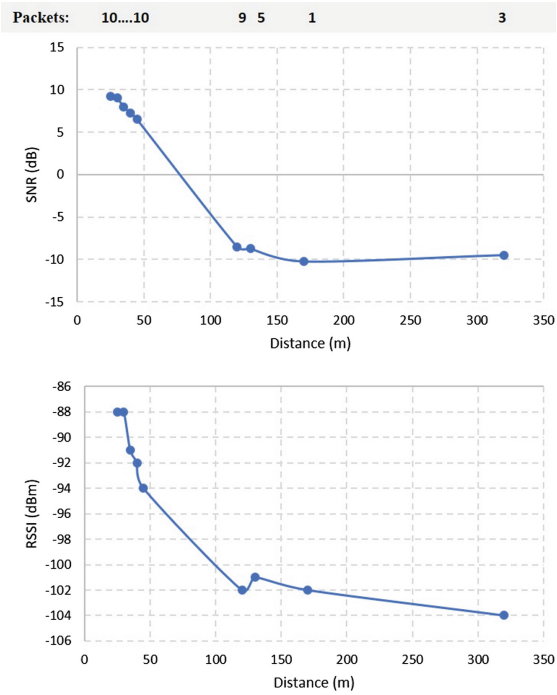

Fig. 6. Non-line-of sight (NLOS) test result

as tall buildings and big trees. It shows that the magnitude of the signal loss varies not only by distance but also by the number of obstructions encountered by the propagated signal.

3.2 Temperature and Humidity of DHT22 Sensor Test

The purpose of this test is to evaluate the accuracy of the DHT22 sensor in measuring temperature and humidity. This test took place on Thursday, 24 March 2022. An online weather forecast website, The Weather Channel, was used to obtain the temperature and humidity data as a reference to the sensor reading. However, the online weather forecast is just a reference since it gives an average value over a wide area.

This test was conducted simultaneously at two places: a hostel room for indoor and Mustafa-Hive for the outdoor test. The node located at the Mustafa-Hive was marked as node 1, while the node located in the hostel room was marked as node 2. The temperature and humidity of the DHT22 sensor were recorded for 18 consecutive hours, starting at 6 a.m. and ending at 12 a.m.

The result of the temperature and humidity test is shown in Fig. 7. The temperature test result showed that outdoor, the temperature has a maximum value of 34.80 °C at 2.00 p.m. and a minimum value of 26.90 °C at 8.00 a.m. In the indoor environment, the temperature has a maximum value of 33.62 °C at 6.00 p.m. and a minimum value of 30.13 °C at 12.00 a.m. Furthermore, it can be seen that both outdoor and indoor

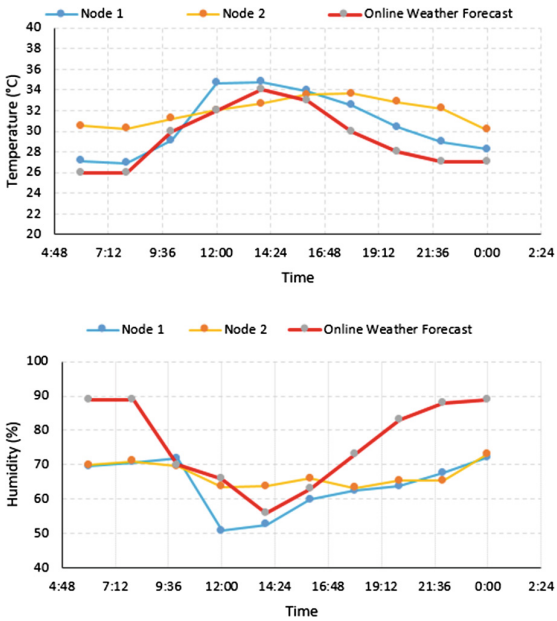

Fig. 7. Temperature and humidity test result

temperature readings do not deviate much from the data on the online weather forecast. In comparison to the indoor temperature, the result in the outdoor environment was closer to the online weather forecast data. From this result, it is concluded that the DHT22 has a pretty accurate temperature reading.

The humidity test result showed that outdoor, the humidity has a maximum value of 72.13% at 12.00 a.m. and a minimum value of 50.88% at 12.00 p.m. In the indoor environment, the humidity has a maximum value of 73.15% at 12.00 a.m. and a minimum value of 63.60% at 6.00 p.m. Compared to the online weather forecast data, it showed that the humidity value deviates significantly with the DHT22 sensor between the hours of 6.00 a.m. to 10.00 a.m. and 6.00 p.m. to 12.00 a.m. while there was a slight difference in humidity value during the time at 10.00 a.m. to 4.00 p.m. It is concluded that the DHT22 sensor has reasonably accurate humidity readings in the afternoon and evening but is less accurate in the morning and night.

4 Conclusions

A prototype of an IoT-based real-time temperature and humidity monitoring system for stingless beekeeping was developed successfully. The system uses LoRa technology as the system connectivity, aiming to cater to the need for monitoring beehives at a medium and large-scale bee farm, which does not have a direct access to a Wi-Fi connection. The test results indicated that the temperature and humidity data are reasonably accurate compared to the online weather channel data. The connectivity test shows that the current prototype has a limitation in the maximum range between the node and the gateway, with

the maximum LOS range is only 205 m. Work on improving this range will be conducted in the near future.

Acknowledgments. The authors would like to thank the Faculty of Engineering, Multimedia University, for supporting the project financially and Brainey Sdn Bhd for providing the Mustafa-Hive.

References

1. M. Z. Mustafa, N. S. Yaacob, and S. A. Sulaiman, "Reinventing the honey industry: Opportunities of the stingless bee," *Malaysian J. Med. Sci.*, vol. 25, no. 4, pp. 1–5, 2018, doi: https://doi.org/10.21315/mjms2018.25.4.1.
2. M. L. Liya and D. Arjun, "A Survey of LPWAN Technology in Agricultural Field," *Proc. 4th Int. Conf. IoT Soc. Mobile, Anal. Cloud, ISMAC 2020*, pp. 313–317, 2020, doi: https://doi.org/10.1109/I-SMAC49090.2020.9243410.
3. V. D. Gavra and O. A. Pop, "Usage of ZigBee and LoRa wireless technologies in IoT systems," *2020 IEEE 26th Int. Symp. Des. Technol. Electron. Packag. SIITME 2020 - Conf. Proc.*, pp. 221–224, 2020, doi: https://doi.org/10.1109/SIITME50350.2020.9292150.
4. A. Zourmand, A. L. Kun Hing, C. Wai Hung, and M. Abdulrehman, "Internet of Things (IoT) using LoRa technology," *2019 IEEE Int. Conf. Autom. Control Intell. Syst. I2CACIS 2019 - Proc.*, no. June, pp. 324–330, 2019, doi: https://doi.org/10.1109/I2CACIS.2019.8825008.
5. N. H. Khairul Anuar *et al.*, "IoT Platform for Precision Stingless Bee Farming," *2019 IEEE Int. Conf. Autom. Control Intell. Syst. I2CACIS 2019 - Proc.*, no. June, pp. 225–229, 2019, doi: https://doi.org/10.1109/I2CACIS.2019.8825089.
6. M. Man, W. A. W. A. Bakar, and M. A. B. B. A. Razak, "An intelligent stingless bee system with embedded IOT technology," *Int. J. Recent Technol. Eng.*, vol. 8, no. 3, pp. 264–269, 2019, doi: https://doi.org/10.35940/ijrte.C4124.098319.