Development of an Integrated Solar-Wind Power Generator

Tareq Saif Ali Al-Areqi, Kah-Yoong Chan(✉), Chu-Liang Lee, Wai-Leong Pang, and Sew-Kin Wong

Centre for Advanced Devices and Systems, Faculty of Engineering, Multimedia University, Cyberjaya Campus, 63100 Cyberjaya, Selangor, Malaysia
kychan@mmu.edu.my

Abstract. With the soaring prices for fossil fuels such as oil and natural gas, renewable energies become hot energy resources to pursue to sustain the energy consumption demand worldwide. Among different types of renewable energies, solar energy is deemed as a promising energy resource due to the abundancies of solar irradiance and the relatively clean solar panel operation process in generating electricity. Solar power generation is weather dependent, so another type of renewable energy can serve to provide adequate power to sustain the energy demand. Wind power is a good combination together with solar power, so an integrated solar-wind hybrid power generator may be a promising energy technology, especially in regions where weather variations are apparent. It is the purpose of this work to demonstrate an integrated solar-wind power generating system and analyse the performance of such a hybrid power generator.

Keywords: Renewable Energy · Solar Power · Wind Power · Integrated Solar-Wind Power Generator

1 Introductions

Nowadays mankind is trying to reduce the reliance on fossil fuels and turn to green energy, due to the carbon dioxide (CO_2) emission and shortage of petroleum availability after a long span of the next 50 years to come. According to the European Union (EU), The European Council endorsed in December 2019 the objective of making the EU climate-neutral by 2050, in line with the Paris Agreement [1]. The fuel that meets a large part of the world's consumption is Fossil fuels, it is reducing day by day, and the planet may be facing irreversible environmental pollution as a result of such things as strong effects on the ozone layer which will increase the radiation of the sun that might cause skin cancers, acid rain which will have effects on building and materials, and global warming effects which we might get more hot days and heatwaves [2]. Reducing dependency on fossil fuels is what many worldwide countries target, even though the International Energy Agency's World Energy Outlook in 2013 said that fossil fuels will still be in control of the power sector, consumed, and used until 2035 [3].

Renewable energy is power generated from renewable resources that are regularly replenished. It is the energies produced by the sun and the natural phenomena on the

M. Y. bin Alias (Ed.): MECON 2022, AER 214, pp. 196–204, 2023.
https://doi.org/10.2991/978-94-6463-082-4_20

surface of the earth, and it is characterized by its continuity and compatibility with the environment. The most important forms of renewable energies include geothermal energy, bio energy, solar energy, wind energy, tidal energy, and hydro energy. These energies are unlike fossil fuels and natural gas, they will not diminish.

According to the Environmental and Energy Study Institute, Energy efficiency simply means reducing energy consumption to complete the same work-that is, avoiding the waste of energy. Renewable energy technologies will help to meet the goals, enhance the cheapest energy efficiency, and are often the most used method to minimize the consumption of the fossil fuels [4].

Hybrid power generation is the result of combining different energy resources to generate electricity. The term hybrid in power engineering refers to a power and energy storage system that works together. Combining these sources would help to make a constant and stable supply of energy. Nowadays hybrid systems are used as stand-alone system that operates as an off-grid, which means they are not linked to a power grid. This would mean, as one example, with the aid of wind energy, the PV panel will be generating enough electricity.

According to Abdali from the University from University of Kufa, the hybrid solar & wind energy system performance is based on the individual components, the paper also proposed a network energy system, and demonstrated the connection between the components [5].

Another paper from the Bangladesh University of Professionals made two designs of an integrated hybrid system in MATLAB and PSIM, the elements of the design consisted of the generator, rectifier, DC to DC converter, Maximum power point tracker (MPPT), and an inverter. The proposed model is an on-grid that converts the unused harnessed power to the grid [6].

In Another paper by Obafemi Awolowo University the paper discussed the potential of wind energy in Nigeria, and presented a practical off-grid design of the hybrid system. The designed charge control unit was described in detail to prevent overcharging and protection from overvoltage [7].

In an article from Mutah University a design of hybrid solar and wind system to power LED lights on highway poles, a vertical type of wind turbine called Banki-Darrieus is designed on the top of highway pole to harness wind energy. The article used experimental and numerical data using HOMER software to obtain the results [8].

Another paper by Chandani from Quantum University Roorkee discussed the development and sizing of a hybrid system with cost analysis. The study was done in Jaisalmer in India, using MATHLAB simulation and the data captured from software called RET Screen software. The cost analysis covered the whole hybrid system with maintenance and operating costs [9].

In this work, an integrated solar-wind power generator is built to demonstrate the functionalities and operations of the hybrid power generating system. Furthermore, the circuit charging behaviours of the hybrid power generator are examined and discussed.

2 Methodology

2.1 Experimental Building Block

Figure 1 shows the block diagram that summarizes the ideas of the hybrid solar-wind power generator system. The system consists of solar panels, wind turbines, charger control batteries, inverter, and AC load. As shown in the diagram, the solar panel and the wind turbine are combined to feed the charger control circuit, which will regulate the energy generated and charge the battery safely. The inverter will convert the direct current (DC) to an alternative current (AC) to the load.

2.2 Circuit Components

2.2.1 Charger Control Circuit

Figure 2 shows the circuits for charger control for the hybrid solar and wind power generating system by using operational amplifiers (OP-AMPs) and transistors [10]. In Fig. 2(a) the OP-AMP is responsible for receiving and regulating the wind turbine energy, while the OP-AMP in Fig. 2(b) receives the energy coming from the solar panel, so both energy sources charge a battery in the middle.

The control circuit for the wind turbine will regulate the energy by shunting or shorting the excess energy to the ground. On the other hand, the charging control circuit for the solar panel will function the same, by cutting the excess energy instead of shunting it. It is important for the wind turbine to be shunted and not cut off, for safety purposes, so the coil inside the wind turbine will be protected from overcurrent.

2.2.1.1 Operational Amplifier

The operational amplifier is designed as a comparator where pin 3 (non-inverting) is used as a sensor and pin 2 (inverting) as a reference input. Resistor R4/RV1 are selected for battery charging voltage, and to make pin 3 higher than pin 2 reference voltage. So, when the wind energy is applied, the OP-AMP in Fig. 2(a) will detect the voltage and as soon it tries to reach and exceed the set threshold voltage, pin 6 of the OP-AMP goes high and will turn on the Q7 transistor.

Q7 will short the circuit instantly the energy exceeds the safe limit for the battery voltage. This process will continue until the voltage regulation across the battery terminals is ensured. The OP-AMP in Fig. 2(b) of the solar panel is also designed with the

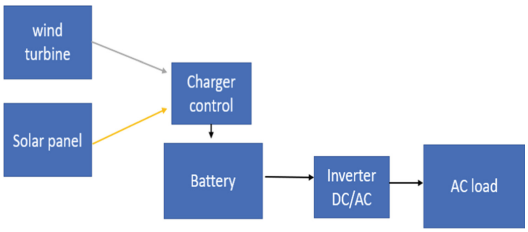

Fig. 1. Block Diagram of the integrated solar-wind power system.

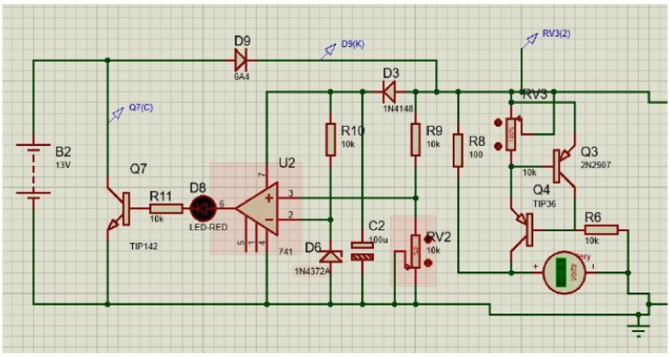

(a)

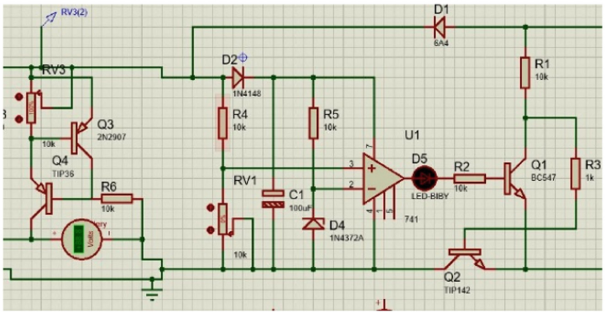

(b)

Fig. 2. Charger control circuits ((a) wind turbine circuit, (b) the solar panel circuit) designed in Proteus 8.

same function, however, Q2 transistor is introduced to make sure that when the solar energy exceeds the threshold, Q2 will cut off, which will keep the energy supply for the battery regulated, so it will keep the battery safe and the solar panel.

2.2.1.2 Current Control

This circuit designed above in Fig. 3 is to control the charging current to charge the battery safely [11]. The battery, which is going to be used is a Lead-acid battery with 7.0 AH.

2.2.2 Single-Phase Full-Bridge Inverter

A full-bridge inverter in Fig. 4(b) is also an H bridge inverter, it is one of the most efficient types of inverters that uses two-wire transformers to give the wanted push-pull oscillating current to the primary side of the transformer. The three wired center type of transformer will be avoided due to the low efficiency.

As shown in Fig. 4(a), the IC IRS2453(1)D is used since it has an outstanding full-bridge driver feature, as it takes dew components for achieving a full-bridge working inverter. We can see four metal-oxide field-effect transistors (MOSFETS) connected to the output load, these MOSFETS are controlled and switched through an external

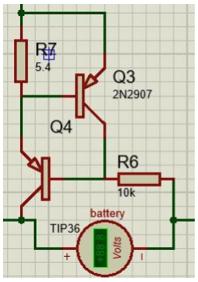

Fig. 3. Current limiter in Proteus 8.

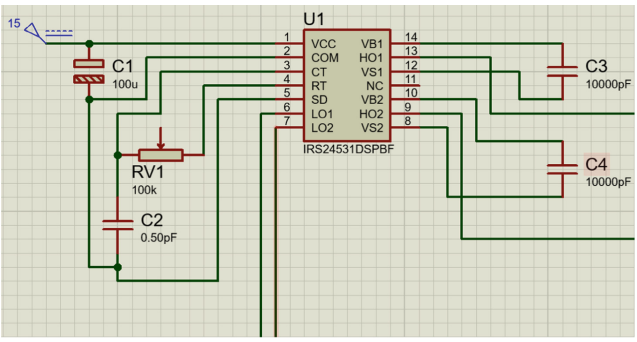

(a)

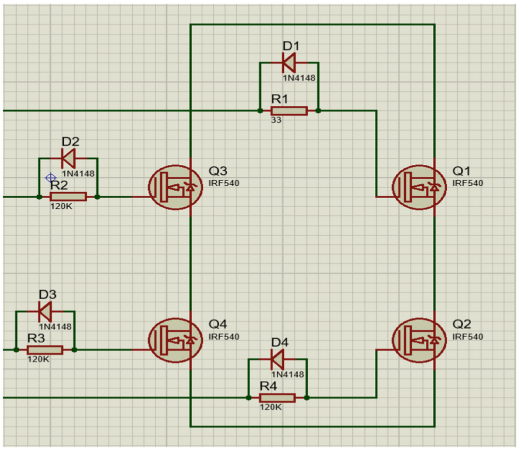

(b)

Fig. 4. Single-phase full-bridge inverter ((a) IC IRS2453, (b) H-bridge configuration) designed in Proteus 8.

oscillator which will convert the input of 12V DC from the battery to an alternate current for the AC load.

2.2.3 Solar Panel and Wind Turbine

2.2.3.1 Solar Panel Specification

In this project, we used one solar panel to demonstrate a small-scale hybrid solar-wind turbine system. Table 1 shows the specifications of the solar used in the prototype.

2.2.3.2 Wind Turbine Specification

The wind turbine has been implemented from fundamental building blocks. The wind turbine design will be classified into three parts.

There are two motors used in this project; one used as a generator and the other as a motor so that the concept of the wind turbine can be demonstrated indoors. The DC Brushed Motor needs a 12v battery, so the li-Po battery is going to be used to turn it on. Figure 5 shows the dimensions of the motor.

Table 2 shows the specifications of the motor used in the prototype. This type of motor has been used in applications that need fast rotating speed; cotton candy machines, grinding machines small cutting benches, etc. The motor can be driven from 9 V to 15 V;

Table 1. Solar panel module specifications [12].

Solar specifications	
Cell Technology	Poly-crystalline
Rated Maximum Power (Pmax)	10 W
Output Tolerance	0–0.3%
Maximum Power Current (Imp)	0.58 A
Maximum Power Voltage (Vmp)	17.5 V
Short Circuit Current (Isc)	0.63 A
Open Circuit Voltage (Vsc)	21.24 V
Nominal Operating Cell	

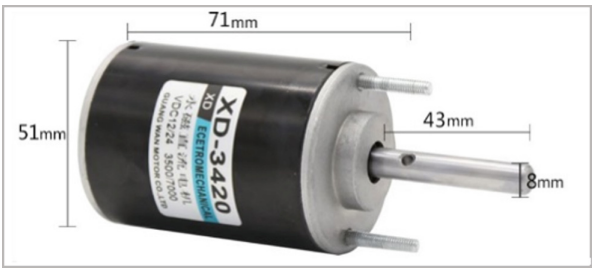

Fig. 5. Motor dimensions [5]

Table 2. Motor specification [13]

Motor specification	
Rated Voltage	12 VDC
Rated Current	2–3.7 A
Rated Power	30 W
No Load RPM	3000
Maximum Torque	2 kgf * cm
Maximum current	10 A
Rotation	Bidirectional

(a) (b)

Fig. 6. (a) Load current consumption, (b) prototype demonstration.

the lower voltage cannot produce enough torque to rotate the motor. This module has a low noise feature and it can reach 3000 rpm with no load.

3 Experiment Result

In this experiment, we tested three conditions on how the battery was going to last. The first condition was how many loads, the second condition was the state of the battery at the beginning of the experiment, and the third condition experiments with charging or without charging conditions. Figure 6(a) shows that the supplied current from the battery to the load is 0.25 A. This value is fed into the inverter and the load. Figure 6(b) presents the small scale prototype at the final stage of development.

3.1 Theoretical Calculation for Battery Durability

To calculate the battery durability, we need to get two values, first is the battery capacity (AH) from the battery datasheet (7.2 Ah), second is the load current (A) as shown in Fig. 6(a). The real-time consumption might vary depending on the load consumption.

Table 3. Practical results with different conditions

Conditions	result
1. With one load, fully charged, without charging	25 h
2. With one load, empty charge, while charging	15 h
3. With two loads, empty charge, without charging	13 h
4. With one load, empty charge, without charging	3 h

The battery durability can be calculated based on the following equation [14].

$$\begin{aligned} &\textit{How long will the battery last with one load} \\ &= \frac{AH}{\textit{Current consumption by the load}} \\ &= \frac{7.2\ AH}{0.25\ A} = 28.8\ \textit{hours} \end{aligned} \tag{1}$$

3.2 Practical Experiment Results

In conclusion, an integrated solar-wind power generator is built and demonstrated. With the introduction of a charger control-unit circuit, the hybrid power generation system functions to charge the battery. The single square wave inverter that has been used in the system worked well and turned on the load. However, losses were observed due to the use of square wave inverters, since it has high harmonics, and with the integration of the wind turbine, it will stabilize the hybrid system during a cloudy day or during weak solar irradiance (Table 3).

Acknowledgments. The authors would like to acknowledge MMU for financially supporting this project.

Authors' Contributions. Tareq Saif Ali Al-Areqi: Data Curation, Formal Analysis, Investigation, Methodology, Visualization, Writing – Original Draft Preparation.

Kah-Yoong Chan: Conceptualization, Formal Analysis, Methodology, Project Administration, Resources, Supervision, Validation.

Chu-Liang Lee, Wai-Leong Pang, Sew-Kin Wong: Visualization, Validation.

References

1. NRDC official website, https://www.nrdc.org/stories/renewable-energy-clean-facts
2. NRDC official website, https://www.nrdc.org/experts/anjali-jaiswal/worlds-largest-solar-park-kurnool-india
3. O. Zinaman, M. Miller, A. Adil, D. Arent, J. Cochran, and R. Vora, "Power Systems of the Future, A 21st Century Power Partnership Thought Leadership Report", National Renewable Energy Laboratory 2015

4. Environmental and energy study institute, https://www.eesi.org/topics/energy-efficiency/description.
5. L. Ali & B. Yakimovich & V. Kuvshinov (2019). "Hybrid Power Generation by using Solar and Wind Energy". Environmental, Industrial and Energy Safety. 2019; 26–31.
6. S. Al-Mamun, R. Hasan, I. Hossain, A. Atik, H. Al Jubair, S. D'Costa, S. Imam. "Design and Analysis of a Solar-Wind Hybrid System". Journal of Power Electronics & Power Systems. 2020; 10(1): 1–13p.
7. Design and Implementation of a Hybrid (Solar-Wind) Power System, https://www.academia.edu/41519475/design_and_implementation_of_a_hybrid_solar_wind_power_system
8. N. Ali & H. Ammari, "Design of a Hybrid Wind-Solar Street Lighting System to Power LED Lights on Highway Poles", https://doi.org/10.3934/energy.2022010
9. C. Sharma, M. Singh, & S. Chaudhary (2021). "Cost Analysis of Solar-Wind Based Hybrid Renewable Energy System". Book "Advances in Automation, Signal Processing, Instrumentation, and Control" (pp.2733–2746), https://doi.org/10.1007/978-981-15-8221-9_256.
10. Homemade circuits, https://www.homemade-circuits.com/solar-wind-2-input-hybrid-battery/
11. Homemade circuits, https://www.homemade-circuits.com/universal-high-watt-led-current-limiter/
12. Cytron, https://my.cytron.io/p-solar-panel-18v-555ma-10w?search=solar%20panel&description=1
13. Cytron, https://my.cytron.io/p-12v-3000rpm-dc-brushed-motor-with-bracket.
14. DNK, https://www.dnkpower.com/how-to-calculate-battery-run-time/