The Design of the Turning Driving System of the Bus

Qin Zhang

The mechanical engineering, Anhui Sanan University Hefei, Anhui Province, China
547637941@qq.com

ABSTRACT
Bus is the most popular means of mass transportation. Therefore, the safety of buses has become a concern. The steering system plays a decisive role in the running of buses, Therefore, the bus steering system is the key to the safety of buses. Electric power steering system is the most widely used and effective steering system at present. It is superior to traditional hydraulic and electric power steering systems in terms of driving safety, comfort and handling stability. Electric power steering system is mainly composed of torque sensor, speed sensor, motor, deceleration mechanism and electronic control unit. In this paper, the various functions of various steering systems in the normal driving process of buse are chosen, and finally the optimal steering system is used to design.

Keywords: *steering system, bus, safety*

1. INTRODUCTION

At present, the bus is a common public transportation, and almost every city in the world has a bus. As the most basic public transportation in a city, the demand for buses increases with the development of the city. The larger the city, the more the population, and the more corresponding bus routes. It is in this situation that the safety of the bus is more important than the safety of the car in general. As one of the two systems to ensure the safety of buses, the bus steering system is an important system to ensure the traffic safety of the majority of people. Designing an environmentally friendly, energy-saving, human-friendly, safe and reliable steering system is also the needs of the majority of people.

2. BUS STEERING SYSTEM

2.1. Steering and driving system structure

When a car is driving, it will change its driving direction according to the driver's idea, which is called the steering of *the* car [1].

The power steering system is a steering system in which the driver uses the force generated by the engine to help the driver control the wheels to steer when the driver turns the steering *wheel* forcibly. Generally speaking, most of the force in a steering is the power generated by the engine, while the driver only provides a force to control the steering direction. But when the power steering device fails, The steering force of the car needs to be provided by the driver independently. Therefore, the power steering system is an additional power steering device based on the mechanical steering system.

3. DESIGN OF BUS STEERING SYSTEM

3.1. Main performance parameters of steering system

3.1.1. Change characteristics of transmission ratio

The transmission ratio of steering system includes the angular transmission ratio of steering system $i_{\omega 0}$.

And the force transmission ratio of the steering system i_p .Force transmission ratio of steering system:

$$i_p = 2F_W / F \tag{1}$$

Angular transmission ratio of steering system:

$$i_{\omega 0} = \frac{\omega_w}{\omega_k} = \frac{d\varphi / dt}{d\beta_k / dt} = \frac{d\varphi}{d\beta_k} \tag{2}$$

3.1.2. selection of steering gear angle transmission ratio

The angle transmission ratio of the steering gear will be reduced, increased or kept unchanged according to the

A. El-Hashash et al. (Eds.): IEIT 2022, ACSR 100, pp. 629–633, 2023.
https://doi.org/10.2991/978-94-6463-058-9_100

steering axle load of the designed vehicle and the service conditions of the vehicle.

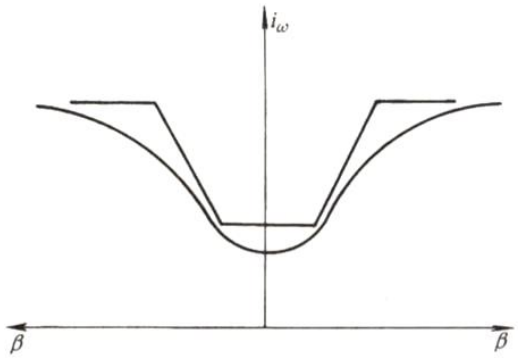

Figure 1 characteristic curve of steering gear angle transmission ratio

3.1.3. transmission clearance of steering gear transmission pair △ t

Transmission clearance refers to the clearance between the transmission pairs of each steering system [4]. The relationship between clearance and steering wheel angle is called transmission clearance characteristic of steering gear transmission pair (Fig. 2).

The significance of studying this characteristic is that it is related to the stability of direct drive and the service life of steering system [2].

Generally speaking, the transmission clearance characteristics of the transmission pair will be designed according to the gradually increasing shape shown in Fig 2.

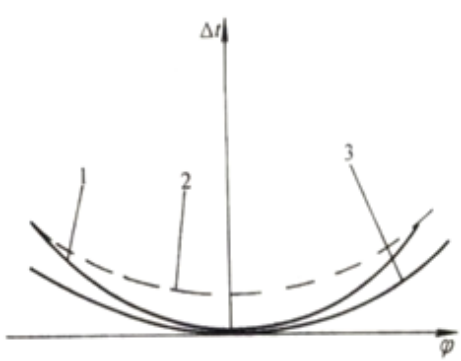

Figure 2 transmission clearance characteristics of steering gear transmission pair

3.2. specific design of steering shaft

3.2.1. rack and pinion steering gear

According to the difference of input gear position and output characteristics, the rack-and-pinion steering gear has four forms, as shown in Figure 3: middle input and output at both ends (A); Side input, output at both ends (B); Side input, middle output (C); Side input, one end output (D).

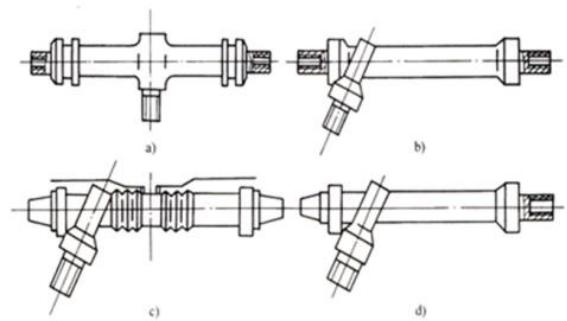

Figure 3 Four Types of Rack and pinion Steering Gear

3.2.2. Determination of data

According to the above discussion, the primary data of this design are as follows:

Table 1: Vehicle parameter table

wheel tread	1740mm
wheelbase (of a vehicle)	4500mm
Full axle load distribution: front/rear	11500V2210 0(kg)
gross mass m_a Vkg	34000(kg)
tyre	175/60R14
Main pin offset distance a	50mm
Tyre pressure p/MPa	0.9
Steering wheel diameter D_{SW}	500m
minimum turning radius	10m
Steering trapezoidal arm	200mm

3.2.3. Data design and calculation

$$\sin\alpha = \frac{L}{R} = \frac{4500}{10000} = 0.45$$

Calculate, draw $\alpha = 26.7437°$, and then pass $\tan\beta = \frac{L}{R\times\cos\alpha - B} = \frac{4500}{10000\times\cos\alpha - 1740} = 0.62587$.

It is concluded that $\beta = 32.0412°$. These two angles are the yaw angle of the steering wheel. Calculation of steering resistance moment of steering knuckle in situ; $M_R = \frac{f}{3}\sqrt[3]{\frac{G_1^3}{P}} = \frac{0.7}{3}\sqrt[3]{\frac{(11500\times 9.8)^3}{0.2}} = 4496.667N\bullet mm$

Calculation of steering wheel turns:

$$n = \frac{\frac{L}{\pi m_n \cos\beta}}{Z_1} = \frac{\frac{180}{\pi 2.5\cos 32.0412°}}{6} = 4.5062$$

Angular transmission ratio calculation:

$$i_w = \frac{\omega_W}{\omega_K} = \frac{n\times 360}{(\alpha+\beta)} = \frac{4.5062\times 360°}{(26.7437°+32.0412°)} = 27.5961$$

Hand force calculation on steering wheel:

$$F_h = \frac{2LM_R}{D_{SW} i_\omega \eta_+} = \frac{2\times 200\times 4496.667}{500\times 27.5961\times 0.9} = 144.8407N$$

according to $F_h = \frac{2M_h}{D_{sw}}$ .Can be concluded

$M_h = \frac{F_h D_{sw}}{2} = \frac{144.8407 \times 500}{2} = 28710.175 N \bullet mm$, the force transmission ratio can be calculated.

$$i_w = \frac{M_R D_{SW} k}{M_h a} = \frac{4496.667 \times 500 \times 10}{28710.175 \times 50} = 15.6622$$

Calculated by the data of the first gear

$$d_1 = \frac{m_n z_1}{\cos\beta} = \frac{2.5 \times 6}{\cos 10°} = 15.2314 mm,$$

the tooth width coefficient $\varphi_d = 1.2$ .Substitute it into the calculation formula of rackwidth.

$$b_2 = \varphi_d d_1 = 1.2 \times 15.2314 = 18.278 mm$$

And then rounding the calculated data to obtain

$b_2 = 20mm$,so the gear tooth width

$b_1 = b_2 + 10 = 30mm$.

According to the calculation of the above formula, the gear of the steering system is a pinion. Usually, the gear of steering gear is made of carburized steel (20CrMnTi alloy steel) with the best performance, while the rack is made of steel (40Cr) which is the most widely used in machinery manufacturing industry. The good matching between them indicates that the hardness is high enough.

3.3. Specific design of steering assist system

The main dimensions of power cylinder are: inner diameter of power cylinder, piston stroke, diameter of piston rod and wall thickness of power cylinder shell.

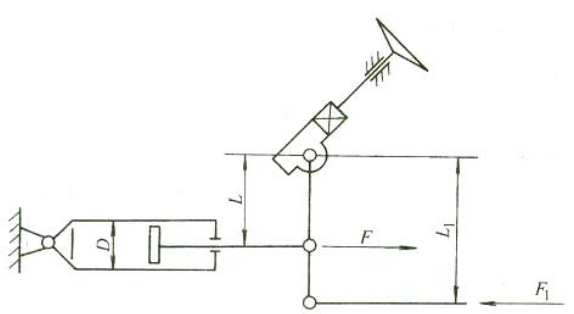

Figure 4 Design diagram of power cylinder

The thrust F generated by the power cylinder is calculated as follows

$$F = \frac{F_1 L_1}{L} \quad (3)$$

where, L_1 Is the length of the steering rocker arm; L is the distance from the steering rocker shaft to the piston of the power cylinder (Zhang, 2014).

The relationship between thrust f and working oil pressure p and power cylinder cross-sectional area s is as follows

$$S = \frac{F_1 L_1}{pL} \quad (4)$$

Because the working areas on both sides of the power cylinder piston are different, it should be calculated according to the working area on the smaller side, that is

$$S = \frac{\pi}{4}(D^2 - d_p^2) \quad (5)$$

where d is the inner diameter of the power cylinder; d_p Is the piston rod diameter, primary selection d_p =0.35D, pressure p=6.3Mpa

$$S = \frac{F_1 L_1}{pL} \quad (6)$$

and $S = \frac{\pi}{4}(D^2 - d_p^2)$ (7)

Simultaneous, it can be concluded

that $D = \sqrt{\frac{4F_1 L_1}{\pi pL} + d_p^2} = 63mm$.

Calculate d=22mm.

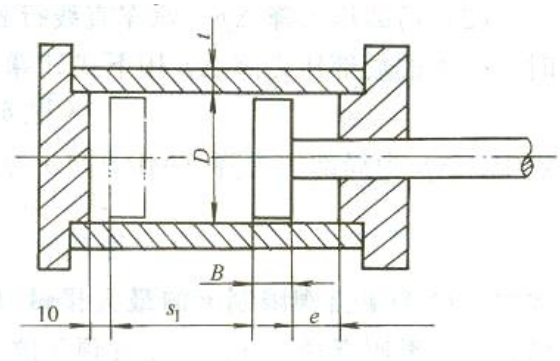

Figure 5 Calculation Diagram of Piston Size

Thickness of piston can be taken as B=0.3D.The Maximum length of the power cylinder is

$$s = 10 + (0.5 \sim 0.6)D + 0.3D + s_1 = 130mm$$

The wall thickness t of the cylinder shell,according to the axial plane tensile stress σ_z .The formula to calculate is

$$\sigma_z = p[\frac{D^2}{4(Dt + t^2)}] \le \frac{\sigma_s}{n} \quad (8)$$

where p is the oil pressure; D is the inner diameter of the power cylinder; T is the wall thickness of the power cylinder shell; N is the safety factor, n=3.5~5.0; σ_s is the yield point of the shell material. The nodular cast iron used for the shell is QT500-05, with a tensile strength of 500MPa and a yield point of 350MPa. Therefore, t=5mm is calculated.

The displacement of the steering oil pump is the value that ensures the power steering to do positive steering assistance. The displacement of the oil pump needs to meet this inequality:

$$Q\eta_V(1-\Delta) \geq \frac{\pi}{4} D_c^2 \frac{d_s}{d_t} \quad (9)$$

Where q is the displacement of oil pump; η_V Is the volume of the oil pump, calculating η_V Generally 0.75~0.85; Δ is the leakage coefficient, Δ = 0.05 ~ 0.10, D_c is the bore of the power cylinder; d_s/d_t Is the moving speed of the power cylinder piston;

$$d_s/d_t = \pi d_s n_h \tan\alpha_0 \quad (10)$$

where, n_h For the maximum frequency of steering wheel rotation, when calculating n_h Values of 1.5~1.7 s^{-1}; The oil pump displacement q of the power steering system can be expressed as

$$Q \geq \frac{\pi^2 D_c^2 d_s n_h \tan\alpha_0}{4(1-\Delta)\eta_V} = 47L$$

Preopening gap e_1, which is the minimum movement of the slide valve required to close the oil circuit of the distribution valve. e_1 If the value is too small, the local resistance will be too large when the oil flows normally; e_1 Excessive value will make steering sensitivity low (Tang, 2006). Generally, it is required that the steering wheel angle should slip at 2 ~ 5. e_1 The distance is 0.2mm.

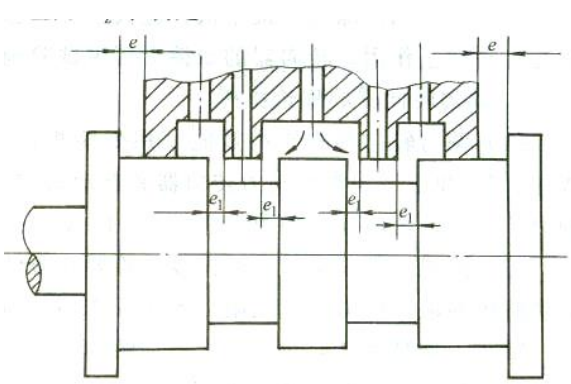

Figure 6 Pre-opening gap e_1

When the total slide valve movement E is too large, the sensitivity of the steering wheel will be reduced; If the value of E is too small, it is easy to cause oil leakage, so that the oil inlet and return circuits cannot be completely cut off, and the working oil pressure and flow rate are reduced. Generally, when the total movement of the slide valve is E, the allowable rotation angle of the steering wheel is about 20 [6].That is,

$e = \frac{20°}{360°} t = 0.49mm$ .The change of local pressure when oil flows through the slide valve. Δp The variation of (MPa)is

$$\Delta p = \rho\xi \frac{v^2}{2} = 13.8\times10^{-4} v^2 \quad (11)$$

ρ is the oil density; ξ is the local resistance coefficient, usually taken as ξ=3.0; V is the flow rate of oil. In the normal running of the car, Δp the value of should be 0.03~0.04Mpa. Substituting the above formula, the allowable value of oil flow rate

[v]= $\sqrt{\frac{[\Delta p]}{13.8\times10^{-4}}} = 4.66 \sim 5.38 m/s$ .Can be used as the maximum displacement of oil under the restriction of overflow valve Q_{max} .Pre-opening gap e_1 and the oil flow rate v when the slide valve is in the middle position.

$$d = \frac{Q_{max}}{2\pi e_1 v} \times \frac{1}{6} = \frac{Q_{max}}{37.7 e_1 v} = 110mm$$

Then, you can calculate the oil flow rate when the slide valve is in the middle position.

$$v = \frac{Q_{max}}{2\pi d e_1} \times \frac{1}{6} = \frac{Q_{max}}{37.7 d e_1} = 5m/s$$

Radial clearance built by slide valve and valve body δ (general δ =0.0005~0.00125cm), the pressure difference of the oil at the inlet and outlet of the slide valve Δp, slide valve diameter D, sealing length e_2 and the dynamic viscosity of oil μ To calculate the leakage of the distribution valve. $\Delta Q = \frac{\delta^3 \bullet \Delta p \bullet \pi p}{12\mu e_2} = 2.26\times10^{-10} cm/s$.

4. CONCLUSION

Steering system is a mechanism used to keep or change the driving direction of an automobile. When the automobile turns to drive, it ensures that there is a coordinated angle relationship among the steering wheels. A safe bus steering system can provide better security when the bus is running.

ACKNOWLEDGMENT

Project Funds:: Teaching Research and Practice of "Hydrauli can Pneumatic Transmission Experiment" Based on the Improvement of Students' Practical Ability(21zlgc043)

REFERENCES

[1] Chen Jiarui.(2011) . Automobile Structure (Volume 2) [M]. Beijing: Machinery Industry Press, February 2011.

[2] Kun Li.(2010). Kinematics Optimization Design of Bus Front Independent Suspension and Steering System Based on Genetic Algorithm [J], Mechanical Design, June 2010): 78-82

[3] Tang Peiyun.(2006).Design layout of bus power steering system and analysis of common problems [J], Bus Technology and Research, 2006,03):37-40

[4] Yu Zhiqiang.(2009). Design matching of hydraulic power steering system for large and medium-sized buses [J]. Bus Technology and Research, 2009, February): 23-25

[5] Zhang Lihao.(2014).Research on self-centering to independent suspension [D], Jilin: Jilin University,2014 ,06

[6] Zhang Yun.(2016).Optimal design of speed ratio characteristics of universal joint transmission shaft in vehicle steering system [D], Jiangsu Province: Southeast University, May 2016.