Inter-firm knowledge dissemination model that considers knowledge innovation and the willingness to disseminate knowledge

Zhuoyi Lian

[1]*Shanghai University of Engineering Science, department of Management, Shanghai, China*
1312750983@qq.com

ABSTRACT

[Purpose/Significance] In the era of knowledge economy, enterprise knowledge is considered to be the main driving force for the development of enterprises, how to find the law of knowledge dissemination, effective knowledge dissemination has become an increasing concern of scholars. [Method /Process] On the basis of the classic infectious disease model SEIR model, enterprises are divided into knowledge innovation enterprises and general knowledge unknown enterprises, on the basis of considering that knowledge innovation enterprises can carry out knowledge innovation Combined with the influence of enterprise knowledge dissemination willingness on enterprise knowledge dissemination, a B-STEHIR model considering the willingness of enterprise knowledge dissemination under the guidance of knowledge innovation of innovative enterprises is constructed, and the average field equation of the model is proposed. The model is simulated using Matlab2020a. [Result/Conclusion] The results show that under the guidance of knowledge innovation of innovative enterprises, the factor of willingness to disseminate plays an important role in the process of enterprise knowledge dissemination, and knowledge spreads more slowly in the knowledge dissemination model that considers the willingness to spread compared with the knowledge dissemination model that does not consider the willingness to spread The stronger the willingness to disseminate innovative knowledge, the slower the dissemination of general knowledge, and enterprises and governments can take various measures to promote the effective dissemination of corporate knowledge.

Keywords: *corporate knowledge, knowledge dissemination, SEIR model, willingness to disseminate, B-STEHIR model*

1. INTRODUCTION

Enterprise knowledge is considered to be the main driving force for enterprises to gain competitive advantage in the era of knowledge economy, which can play a powerful role in promoting the development of enterprises. In 1993, Drucker, a master of management, put forward the view that the knowledge and knowledge workers of the enterprise are the most important assets of the enterprise [6] With the advent of the era of knowledge economy, scholars in various fields have conducted research on knowledge dissemination from psychology, communication, management, sociology and other aspects. Finding out the laws of knowledge dissemination and effective knowledge dissemination have become the main research topics in the field of communication.

2. LITERATURE REVIEW

In the era of knowledge economy, enterprise knowledge dissemination, as an important part of enterprise knowledge management, can make knowledge establish a huge competitive advantage for enterprises in the process of dissemination and absorption between enterprises, create huge economic benefits, and is the source of power to promote the development of enterprises [5]. Many scholars have different views on knowledge dissemination, most scholars regard knowledge dissemination as the interaction process between the unknown and the knowledge owner, and believe that knowledge is transmitted and received in the process of communication, learning and interaction between the two. At present, scholars' research on knowledge dissemination is roughly divided into two

S. A. R. Khan et al. (Eds.): ICMSSE 2022, AHCS 12, pp. 658–664, 2023.
https://doi.org/10.2991/978-94-6463-056-5_96

categories: empirical research and theoretical research, and the specific content is as follows:

In terms of empirical research, scholars focus on the factors that affect the dissemination of corporate knowledge, and the factors that have a positive effect on enterprises through field research and questionnaire investigation and research, such as advocating organizational culture sharing, widely applying knowledge assets and technological inventions [1] [2] [5] More representative is Swee's research, which argues that communication capacity can greatly influence knowledge dissemination, and synthesizes the factors into a conceptual framework that describes some of the key factors that affect the effectiveness of the knowledge transfer process [2] Different from theoretical research, the limitation of empirical research is that the number of field research samples is too small, and the questionnaire survey has individual subjectivity, so the current research mainstream is generally theoretical research.

In terms of theoretical research, scholars have introduced infectious disease models that study viruses into the study of knowledge dissemination, and have continuously improved models considering different transmission groups and different transmission mechanisms. The infectious disease model is one of the first methods used to study the dynamics of knowledge transmission, and as early as 1927, Kermack et al. [3] proposed the classic SIR model [6].

In order to make the knowledge dissemination model more in line with the actual situation, based on the classic SEIR model, this paper divides the unmastered knowledge enterprises into general knowledge unknown enterprises and knowledge innovation enterprises, and constructs a knowledge dissemination model that considers the willingness of enterprise knowledge dissemination under the guidance of knowledge innovation of innovative enterprises, and at the same time gives the average field equation and simulates the simulation verification conclusion to help better grasp the law of enterprise knowledge dissemination. Provide strategic advice for more effective knowledge dissemination for enterprises.

3. CONSTRUCTION OF CORPORATE KNOWLEDGE DISSEMINATION MODEL CONSIDERING THE WILLINGNESS TO DISSEMINATE

This paper is based on the classic SEIR model, and assumes that enterprise knowledge dissemination is carried out in a closed and N nodes of mixed uniform network, each node represents the state node of various types of enterprises, and the interaction process between enterprises (such as mutual investigation, learning, cooperation and knowledge sharing between enterprises, etc.) As a way of disseminating enterprise knowledge, the total number of nodes is not changed. At the same time, considering the invention process of innovative enterprises and the influence of communication willingness, the enterprise status in the enterprise knowledge dissemination system is divided into B (knowledge innovative enterprise), S (general knowledge unknown enterprise), T (innovative knowledge mastery enterprise), and E Seven categories: (General Knowledge Mastery Enterprise), H (Innovative Knowledge Dissemination Enterprise), I (General Knowledge Dissemination Enterprise), and R (Enterprise Knowledge Transfer Enterprise), Construct a Knowledge Dissemination Model Considering the Willingness to Disseminate (B-STEHIR Model for short) , as shown in Figure 1. Among them, B (knowledge innovation enterprise) has the ability of knowledge innovation and will go through a process of knowledge invention; S (Enterprises with Unknown General Knowledge) refers to groups that are not exposed to the knowledge of other enterprises; T (Enterprise with Innovative Knowledge) refers to an enterprise that has gone through the invention process of an innovative enterprise and has mastered the knowledge of innovation or has been transformed by the dissemination of innovative knowledge; E (General Knowledge Mastery Enterprise) refers to an enterprise that has mastered the general knowledge of the enterprise; H (Innovative Knowledge Dissemination Enterprise) refers to the enterprise that disseminates the innovative knowledge of the enterprise; I (General Knowledge Dissemination Enterprise) refers to the enterprise that disseminates the general knowledge of the enterprise; R (Enterprise Knowledge Transfer Enterprise) refers to enterprises that pursue new knowledge, obsolete or upgrade existing knowledge.

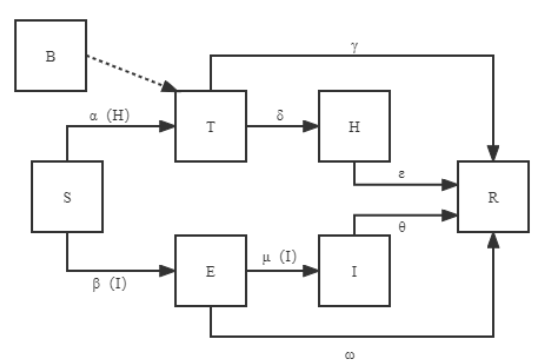

Figure 1 Diagram of an inter-firm knowledge dissemination model that considers the willingness to innovate and disseminate knowledge.

According to Figure 1, corporate knowledge follows the following rules in the process of dissemination:

After the state change from B to T, the knowledge innovation enterprise will be transformed into an innovative knowledge mastery enterprise. Due to the opportunity for enterprise development brought about by

new marketing methods, new technologies, new methods, etc., the innovation knowledge is not necessarily disseminated after the enterprise masters the innovation knowledge, and there is a certain probability that the innovative knowledge will be disseminated because of the cooperative relationship with subsidiaries, cooperative enterprises, etc. or other relationships that may bring benefits to it, thus becoming an innovative knowledge dissemination enterprise. This paper defines this probability as the rate of willingness to disseminate innovative knowledge δ. Innovative knowledge Master the enterprise to pursue new knowledge with the probability of γ, eliminate old knowledge and thus transform into enterprise knowledge and move out of the enterprise; General knowledge mastery enterprise receives knowledge from general knowledge dissemination enterprise, accepts and disseminates this knowledge with a probability of μ and transforms into a general knowledge dissemination enterprise, due to the elimination or upgrading of knowledge, the probability ω is converted into enterprise knowledge and moved out of the enterprise.

Innovative knowledge dissemination enterprises and general knowledge dissemination enterprises are transferred out of enterprises with the probability of ε and θ respectively due to the elimination or upgrading of knowledge.

B represents the knowledge innovation enterprise to create the knowledge state, S(t), T(t), E(t), H(t), I(t), R(t) respectively represents the general knowledge unknown enterprise, the innovation knowledge mastery enterprise, the general knowledge mastery enterprise, the innovative knowledge dissemination enterprise, General knowledge dissemination enterprises, enterprise knowledge transfer out of the density of enterprises at t-time, and conditional S(t)+T(t)+E(t)+H(t)+I(t)+R(t)=1; 0<α, β, δ, γ, μ, ω, ε , θ<1 was established.

According to the above assumptions and the rules of enterprise knowledge dissemination, the average field equation of the enterprise knowledge dissemination model considering knowledge innovation and communication willingness is constructed, of which <k> is the network average.

$$\frac{dS(t)}{dt} = -<k>\beta S(t)I(t) - <k>\alpha S(t)H(t) \quad (1)$$

$$\frac{dT(t)}{dt} = <k>\alpha S(t)H(t) - (\gamma+\delta)T(t) \quad (2)$$

$$\frac{dE(t)}{dt} = <k>\beta S(t)I(t) - <k>\mu E(t)I(t) - \omega E(t) \quad (3)$$

$$\frac{dH(t)}{dt} = \delta T(t) - \varepsilon H(t) \quad (4)$$

$$\frac{dI(t)}{dt} = <k>\mu E(t)I(t) - \theta I(t) \quad (5)$$

$$\frac{dR(t)}{dt} = \gamma T(t) + \varepsilon H(t) + \omega E(t) + \theta I(t) \quad (6)$$

where S(t), T(t), E(t), H(t), I(t) and R(t) are continuously differentiable functions.

4. B-STEHIR MODEL SIMULATION

This section uses Matlab 2020a software for simulation, using the Runge-Kuntt method to solve the differential equation system (1)-(6), whether to consider the willingness to propagate, different rates of willingness to propagate, different rates of dissemination of knowledge, and different levels of knowledge of innovation Simulation of the model under the elimination rate. Suppose that enterprise knowledge is spread in a mixed uniform network with N nodes, each node represents an enterprise, N = 100, the initial state is only one general enterprise knowledge disseminator, ten knowledge innovative enterprises, and the rest are general knowledge unknown enterprises, that is I(0)=0.01, B(0)=T(0)=0.1, S(0)=0.89, E(0)=H(0)=R(0)=0.

When α=0.8, β=0.5, γ=0.8, δ=0.2, μ=0.4, ω=0.6, ε=0.05, θ=0.07, <k>=20, The density of groups in the network changes over time as shown in Figure 2. The simulation results show that compared with the knowledge dissemination model that does not consider knowledge innovation and communication willingness, in the knowledge dissemination model that considers knowledge innovation and communication willingness, the dissemination speed of general knowledge of enterprises will slow down, the density stability value of enterprise knowledge moving out of the enterprise group is smaller, and the density growth rate of general knowledge mastery enterprises will slow down. It is further shown that in the process of enterprise knowledge dissemination, considering the willingness to disseminate has a greater impact on the entire enterprise knowledge dissemination system.

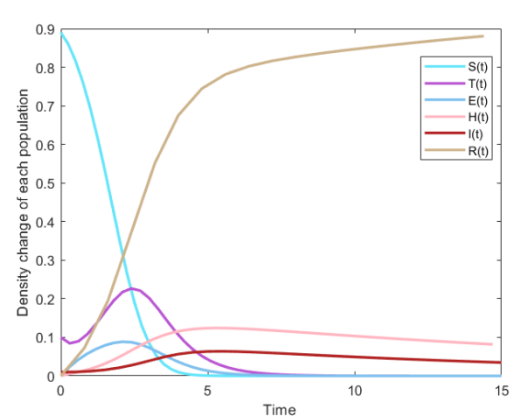

Figure 2 Trends in population density over time.

Figure 3 shows the density change of general knowledge propagation enterprise and enterprise knowledge out enterprise when considering propagation willingness and not propagation willingness, setting the model parameter value to S (t) =0.89, T (t) =0.1 = H (t) =0, E (t) =0, and I (t) =0.01, R (t) =0, α=0.5, β =0.8, γ=0.2,

μ=0.4, ω=0.6, ε=0.05, θ=0.07. Figure 3 (a) shows that the peak density of the general knowledge propagation enterprise is higher and the longer time it takes to reach the stable state is higher than when considering the propagation intention. Figure 3 (b) shows that the density of the enterprise knowledge is shorter and the density of the stable state is lower. The simulation results show that considering the propagation will affects the density change speed and stability of the general knowledge propagation enterprises greatly.

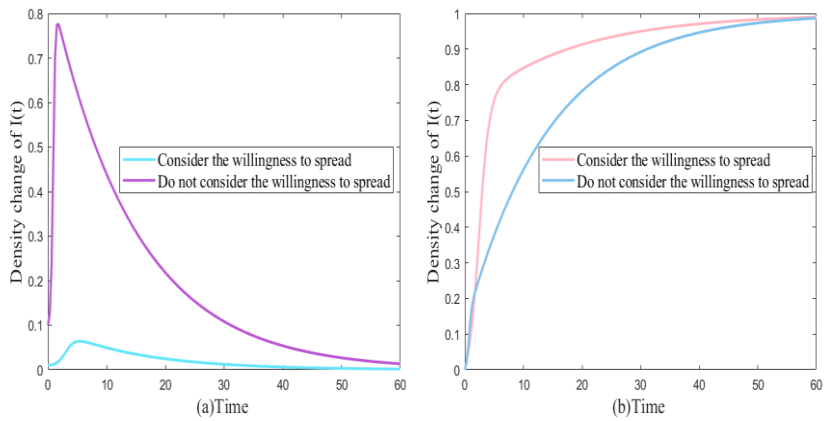

Figure 3 The density change of the general knowledge communication enterprise (a) and the enterprise knowledge moving away from the enterprise (b) under considering the communication willingness and without considering the communication willingness.

Figure 4 shows the density change trend of innovative knowledge mastering enterprises and general knowledge dissemination enterprises, under different values and different values. At this time, the other parameter values are set to α=0.8, β=0.5, γ=0.8, δ=0.2, μ=0.4, ω=0.6, and θ=0.07. Figure 4 (a) shows that the peak density value of innovative knowledge mastery enterprises increases as the elimination rate of innovation knowledge decreases and changes not significantly, taking longer time to reach a stable state; Figure 4 (b) shows that the density of general knowledge communication enterprises increases slightly as the elimination rate of innovation knowledge increases. The simulation results show that the change of the density change of innovative knowledge mastery enterprises and the density change of general knowledge communication enterprises.

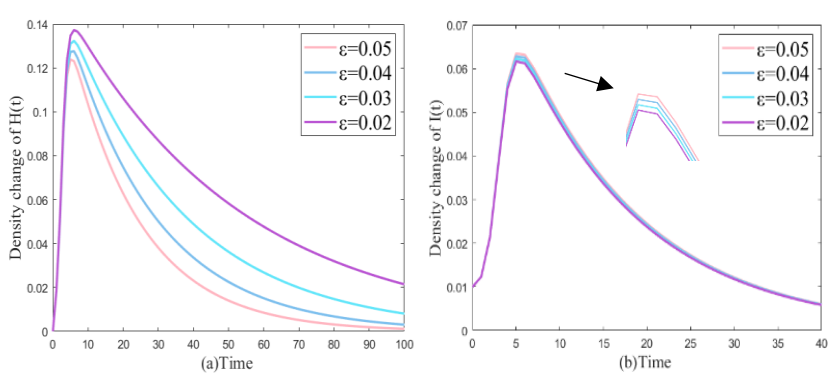

Figure 4 Under different elimination rates of innovation knowledge, innovation knowledge grasps the density change of enterprises (a) and general knowledge communication enterprises (b).

Figure 5 shows the density change trend of general knowledge dissemination enterprises, innovative knowledge dissemination enterprises and enterprise knowledge enterprises under different innovative knowledge dissemination rates with different values. At this time, the remaining parameter values are set to β=0.5, γ=0.8, δ=0.2, μ=0.4, ω=0.6, ε=0.05, θ=0.07. Figure 5 (a) shows that the smaller the innovation knowledge is, the smaller the peak density is and the larger the density change of the enterprise; Figure 5 (b) shows that the density of enterprise knowledge moving out of the enterprise increases with the increase of the dissemination rate of innovative knowledge, and finally tends to stabilize; Figure 5 (c) shows that the higher the dissemination rate of innovative knowledge, that is α The larger the, the higher the peak density of innovative knowledge dissemination enterprises and the smaller the growth. The simulation results show that the rate of innovative knowledge dissemination has a significant impact on the density change of general knowledge dissemination enterprises, and has little impact on the density change of enterprise knowledge moving out of enterprises and innovative knowledge dissemination enterprises.

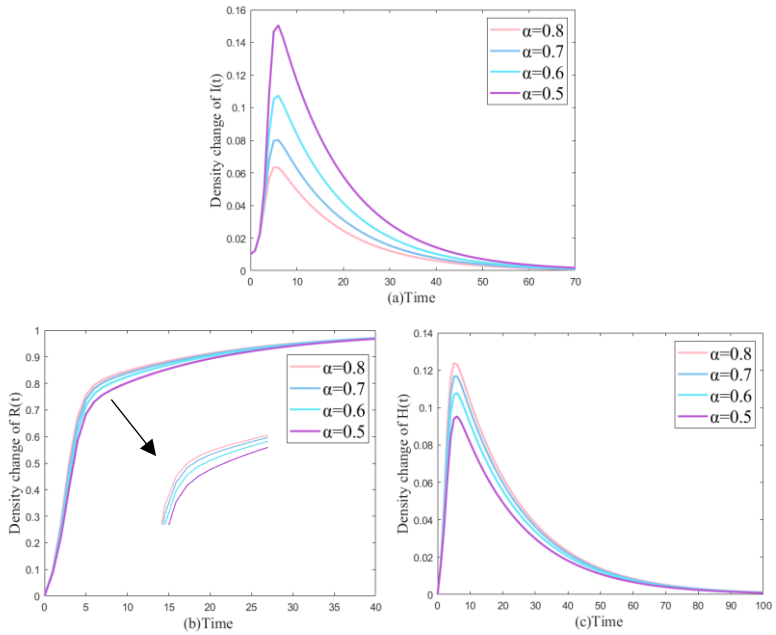

Figure 5 Under different rates of innovative knowledge communication, the density of general knowledge communication enterprises (a), innovative knowledge communication enterprises (b), and enterprise knowledge and enterprises (c) moving out changes.

Figure 6 shows the density change trend of enterprises under different propagation rates, S (t), T (t) =0.89, H (t) =0.1, H (t) =0, I (t) =0 (t) =0, I (t), R (t) = 0, except for the change, the state transfer parameters are consistent with those in Figure 3.Figure 6 (a) shows that, with the increased willingness to spread, The density of enterprises with unknown knowledge will reach a stable state faster, The rate of decline will accelerate as the willingness to spread increases; Figure 6 (b) shows that the density of general knowledge mastery enterprises decreases as the willingness to spread them decreases, It takes longer to peak and a greater peak, And during the change of the probability of transmission will from 0.4 to 0.2, General knowledge of the density of the enterprise change is more obvious; Figure 6 (c) shows that the density of general knowledge dissemination enterprises decreases as the willingness to spread them decreases, Greater a greater peak density, And during the change of the probability of transmission will from 0.4 to 0.2, The density change of general knowledge communication enterprises is particularly obvious, The peak time and decrease to steady state time change not significantly; Figure 6 (d) shows that the density of enterprise knowledge moving out of the enterprise increases with the increasing willingness to spread, However, the time to reach the steady state did not change significantly. The simulation results show that: with the change of innovative knowledge mastery enterprises to innovative knowledge dissemination willingness, the density of general knowledge mastering enterprise, general knowledge unknown enterprise, general knowledge dissemination enterprise, the enterprise knowledge transfer enterprise has changed greatly.

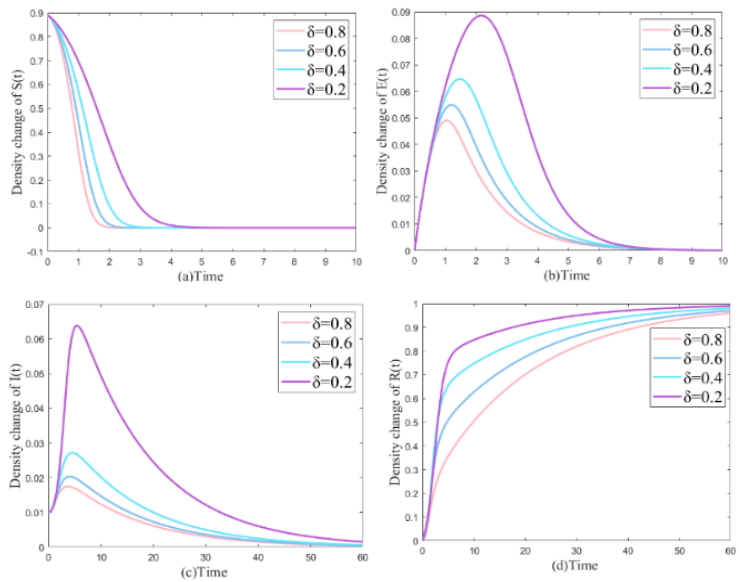

Figure 6The density change of enterprises with unknown general knowledge (a), enterprises (b) with master general knowledge, general knowledge communication enterprises (c), and enterprises (d) with removed enterprise knowledge under different communication intentions.

5. CONCLUSIONS

This paper draws lessons from the classic SEIR infectious disease model, study the idea of enterprise knowledge transmission process, explore the law of the enterprise knowledge transmission, considering the knowledge innovative enterprises can knowledge innovation, on the basis of the enterprise knowledge transmission will influence on enterprise knowledge transmission, build the B-STEHIR model, at the same time gives the average field equation, The Runge- -Kuntt method is used to simulate the model and analyze the influence of the relevant parameters in detail. Simulation results show that in the innovative enterprise knowledge innovation led, communication will have an important influence on enterprise knowledge dissemination system, compared to ignore the communication will, consider the communication will is more accord with the actual situation, the way for the enterprise to improve the competitive advantage, efficient dissemination of enterprise knowledge, better understand the enterprise knowledge dissemination law provides a new idea. Enterprise knowledge will be affected a lot in the process of communication. This paper has some limitations in considering its communication network as a uniform network, and the scale-free network may be more practical. We hope that the subsequent research can consider this study in the scale-free network, and consider more factors for research.

REFERENCES

[1] Fernandes, K. F. , & Raja, V. . (2002). A practical knowledge transfer system: a case study. Work Study, 51(3), p.140-148.

[2] Goh, S. C. . (2002). Management effective knowledge transfer: an integrative framework and some practice implication.

[3] Kermack, W. O. , & Mckendrick, A. G. . (1927). A contribution to the mathematical theory of epidemics. Proceedings of the Royal Society of London Series A,

[4] Omar Sharifuddin Syed-Ikhsan, Syed, & Rowland, F. . (2004). Knowledge management in a public organization: a study on the relationship between organizational elements and the performance of knowledge transfer. Journal of Knowledge Management, 8(2), 95-111.

[5] Steven Pinch, Nick Henry. (1999). industrial clustering and the British motor sport industry. Paul Krugman's geographical economics Regional Studies (S0034-3404), 33(9), 815-827.

[6] Wang, H. , Wang, J. , Ding, L. , & Wei, W. . (2017). Knowledge transmission model with consideration of self-learning mechanism in complex networks. Applied Mathematics and Computation, 304, 83-92.