Field Oriented Control Technique for PMSM

Prakash. L. Chavan[1](✉), Devendra Gowda[2], and Sanjeev K. Nayak[3]

[1] KIT's College of Engineering Kolhapur, Shivaji University Kolhapur, Kolhapur, Maharashtra, India
prakash264@gmail.com
[2] DKTE Society's Textile and Engineering Institute, Shivaji University Kolhapur, IchalkaranjiKolhapur, Maharashtra, India
[3] Valeo India Pvt. Ltd., Chennai, Tamil Nadu, India

Abstract. Vector control of permanent magnet synchronous motor drive based on power transform for PMSM model is discussed in this work. Controlling the torque and speed vectors can be used to get precision motor drive efficiency results. The method that has been proposed is based on the class of decomposers the material is divided into different components, one is associated with the pair and the other is associated with its line. Furthermore, it discusses the results of using the vector controlled PMSM. To create the basic design of the precision PMSM, a thorough examination of the current technique was conducted. The Park, Clarke, and their inverse transformations were utilized to perform the three-phase to dq transformation which was then analyzed and used to describe the PMSM drive. The findings of the simulation were validated the suggested motor drive model and control technique.

Keywords: Vector control · Field oriented control · Permanent magnet Synchronous Motor

1 Introduction

Every industry relies heavily on electric drives. Each industry has its own set of operating conditions and specifications. The proper motor and control technique should be chosen for the drive system design in order to meet all criteria while keeping costs as low as possible. Variable speed and constant speed drive systems are the two types of drive systems. Constant speed drives have traditionally been AC machines with a fixed frequency sinusoidal power source, whereas DC machines utilize variable speed drives. Brushes and commutators, on the other hand, are frequently found in DC motors, causing maintenance and repair issues as well as increased spark loss, higher motor inertia and generally high taxes. Scalar control approaches such as the V/f scheme, have their own performance limits. Oscillations in the generated torque are produced using the scalar control approach for induction motor. As a result, a better control strategy for induction motor is necessary to provide greater dynamic performance. Advanced control approaches to separate magnetization and patterning operations can be accomplished with the superior mathematical processing given by microcontrollers and digital

© The Author(s) 2023
S. Tamane et al. (Eds.): ICAMIDA 2022, ACSR 105, pp. 474–484, 2023.
https://doi.org/10.2991/978-94-6463-136-4_41

signal processors. AC induction motor torque flux direction control is the term for the decoupling torque and magnetization flux (FOC). Directional control method discusses how to directly regulate torque and speed depending on the motor's electromagnetic condition. The first technology to regulate actual flux torque control variables is FOC. The torque-generating component of the stator flux may be regulated separately then to the separation of the stator current components. At low speeds, decoupling control is accomplished, Because the magnetization of the motor is generally kept to a reasonable level, the torque is usually adjusted to regulate the speed. FOC is designed for high-performance generator and motor applications that need to work smoothly over a wide speed range, provide full torque at zero speed, and raise and reduce speed quickly.

2 Literature Review

2.1 Pmsm

A PMSM, in contrast to traditional rotor windings, comprises of a permanent magnet that operates as a rotor. Three evenly spaced fixed stator windings surround the rotor. Each coil current generates a magnetic field vector, which adds up to make a total magnetic field. Torque is generated in the motor by the attraction or push between the stators magnetic field and the permanent magnets rotor magnetic field. The stator can create a magnetic field of any direction and amplitude by changing the current in the three windings and therefore the torque generated can be regulated. Static magnet motors are smaller than induction motors of equivalent power. Due to the lack of a rotor cage, it has a lower rotor inertia than induction motors.

This enables quicker answers. The sole disadvantage of these stationary magnet motor is the complexity of the algorithms and circuitry necessary to manage the motor current.

2.2 Scalar Control

The simplest PMSM control is a scalar control in which the relationship between current or voltage and frequency remains constant over the motor entire speed range shown in Fig. 1. The frequency is set according to the synchronous speed requirement and the voltage/current values are adjusted to maintain a constant ratio between the two. It does not use an angle control hence it is called a scalar control. This method is easy to implement and has low requirements because it uses an open-loop control method without feedback on the position or parameters of the motor computing power of the control hardware, but its simplicity also comes with some limitations. One limitation is the instability of the drive system after going through a certain applicable frequency, to overcome this the rotor has to be made with a small winding to synchronize with the rotor at electrical frequency, doing so will limit the number of design choices for rotors. For example, damper rods with internal magnets. Most PMSMs are so constructed without small coils, and they are not applicable to traditional scalar control. Another disadvantage of the lack of feedback is the poor dynamic performance of the system, which also limits the use of this control method, e.g., pump drives. For applications requiring high

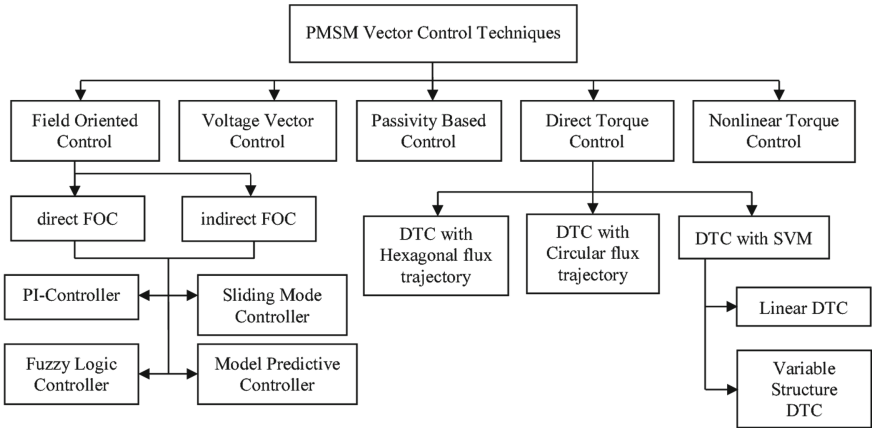

Fig. 1. Control techniques of PMSM

dynamic performance, vector control is considered. One way to improve performance without using position feedback is to use inverter variations with intermediate circuit voltages to determine the correct modulation.

2.3 Variable Control

Adjusting the angle, and hence the variable, is feasible. Amplitude of the magnetic flux enhanced dynamic performance of the drive system can be achieved compared to scalar control. The two features of vector control are field direction control and direct torque control. In field directional control, the aim is to adjust the direct shaft current i_d and the perpendicular shaft and command to achieve the required torque. By controlling the i_d and command independently a maximum torque per amp (MPTA) rating can be achieved to reduce the current required for the selected torque, maximizing efficiency.

DTC was first introduced for instant messaging. These styles are Simplicity, performance, and robustness are the hallmarks of this product. Unlike the FOC system, the DTC functions with no external dimension of the propellers' mechanical location. Anyway, to be sure of the known direction of rotation of the PMSM, the rotor current position in any case, to verify that the PMSM's rotational orientation is understood, the position of the rotor must be known when the motor is started. The simple reason is that the DTC does not have any current controller, rotary reference frame converter or PWM generator. The disadvantages encountered are high current and ripple control, variable switching frequency, high position noise at low speed and torque at low speed, lack of DC control capability. It is also important to properly estimate the intermediate circuit voltage and stator resistance to obtain drive system stability. There are number of different proposals to improve the characteristics of DTC, similar to advanced switching table and the addition of the number of sectors and using a comparator with multilevel delay.

3 Methodology

3.1 Field Oriented Control Theory

Magnetic flux and torque producing current in DC motors are orthogonal and may be adjusted individually, according to field-oriented control theory. These currents create a magnetic force that is also orthogonal. The produced torque is calculated using the following equation.

$$Te = Ka\, I_f\, Ia \tag{1}$$

where I_f is the magnetic flux and Ia is an armature current.

As a result, the magnetic flux is simply linked to the current in the stator windings. However, if the magnetic flux remains constant, the armature current is commonly used to adjust the torque. As a result, DC machines are said to have torque and flux control that is distinct or independent. The stator and rotor fields of an AC machine are not orthogonal to each other. The stator current will be the sole current that will be regulated. Field direction control is a technique for achieving decoupled torque and magnetic flux control by transforming the quantity of stator current (phase current) in a fixed coordinate system into current factors that may be used to regulate torque and magnetic flux. In a stationary coordinate system, generate torque and magnetic flux. System of rotational coordinates.

FOC has the following advantages: Converts a complicated, linked AC model together into simple live environment, High torque and low beginning current, better precision and large speed range to weaken the field.

Three frames of reference are used in the FOC approach, and one-to-one transformations are desired.

1. The stator frame of reference a, b, c, in which a, b, and c are coplanar and separated by 120^0.
2. An orthogonal frame ab is a frame that is in the same plane as the stator frame but has a 90^0 angle between the two axes rather than a 120^0 angle. An axis inside the replacement frame is aligned with another axis.
3. dq, at the north and south poles or along the rotor magnetic flux vector, the d-axis is 90^0 aligned with the d-axis, and the q-axis is 90^0 aligned with the d-axis.

The transformations used to divide the stator current into torque, Iq and flux, Id producing components are shown in Fig. 2.

A combined vector representation of all changed values is shown in Fig. 3. When a PI regulator controls the torque and flux producing factors, the voltage-controlled outputs are likewise converted back (inversely converted) to the stator reference system.

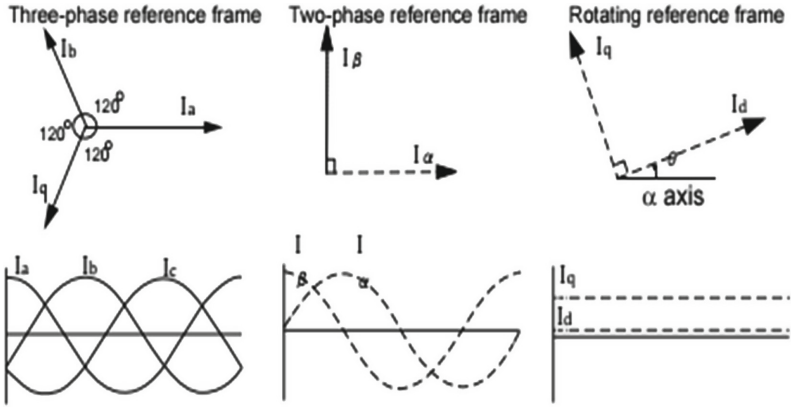

Fig. 2. (a) Three phase reference frame (b) two phase reference frame (c) Rotating reference frame.

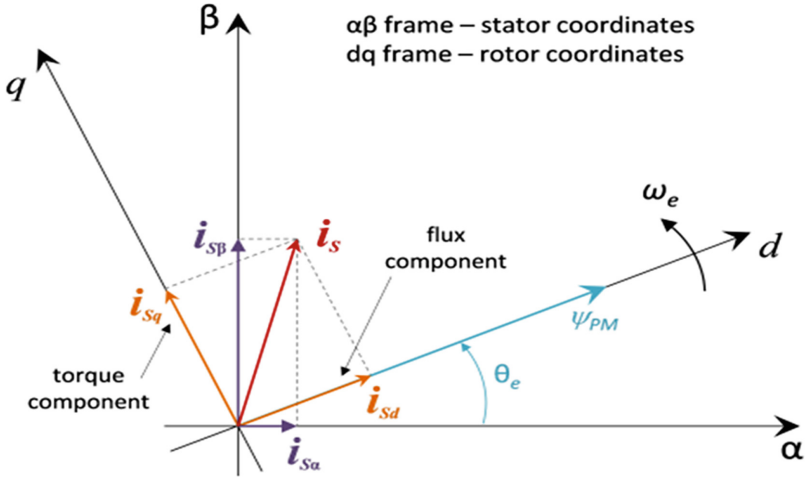

Fig. 3. Orientation of stator stationery and rotor rotational reference frames, with current components transformed into both frames

3.2 Transformations

The Iq and Id components are fitted to the rotating frame in the FOC. As a result, the observed stator currents must be translated to a two-axis spinning dq rotor reference system from a three-phase time-varying stator reference system. There are two ways to accomplish this shown in Fig. 4.

The Clarke transform is a transformation from a three-phase 120^0 frame of reference to a two-axis orthogonal frame of reference. The Park transformation is the transformation from an orthogonal 2-axis frame of reference to a 2-axis rotating frame of reference.

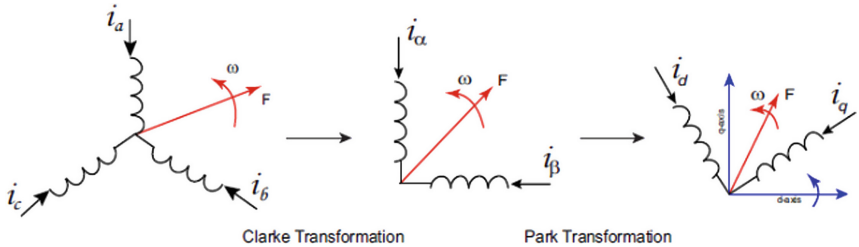

Fig. 4. Forward transformations

3.3 Park Transformation

The magnitude of the two-axis orthogonal static coordinate system is then converted to the magnitude of the rotational coordinate system. The transformation is represented by the following equations:

$$\mathrm{id} = \mathrm{i}\alpha \cdot \cos(\theta) + \mathrm{i}\beta \cdot \sin(\theta) \tag{2}$$

$$\mathrm{iq} = -\mathrm{i}\alpha \cdot \sin(\theta) + \mathrm{i}\beta \cdot \cos(\theta) \tag{3}$$

where: θ - rotation angle.

3.4 Inverse Park Transformation

The tension components in the rotation coordinate system are now provided by the PI controller's output. As a result, the reference voltage waveforms must be pushed into.

the static coordinate system using the inverse of the prior method. The inverse park transform is used to convert the values in the rotating coordinate system into a 2-axis orthogonal static coordinate system. The following equations represent the Park inverse transformation:

$$\mathrm{V}\alpha = \mathrm{Vd} \cdot \cos(\theta) - \mathrm{Vq} \cdot \sin(\theta) \tag{4}$$

$$\mathrm{V}\beta = \mathrm{Vd} \cdot \sin(\theta) + \mathrm{Vq} \cdot \cos(\theta) \tag{5}$$

3.5 Clarke Inverse Transformation

Two-axis orthogonal static coordinate system transformation to the stationary state of the three-phase stator, the inverse Clarke transform is used. The formulae for the inverse Clarke transform are as follows:

$$\mathrm{Va} = \mathrm{V}\alpha \tag{6}$$

$$\mathrm{Vb} = -\sin(30^\circ) * \mathrm{V}\alpha + \cos(30^\circ) * \mathrm{V}\beta \tag{7}$$

$$\mathrm{Vc} = -\sin(30^\circ) * \mathrm{V}\alpha - \cos(30^\circ) * \mathrm{V}\beta \tag{8}$$

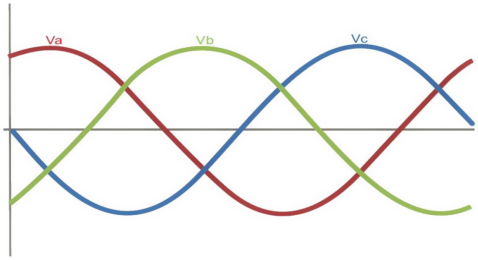

Fig. 5. Sine PWM Voltage wave form Va,Vb and Vc

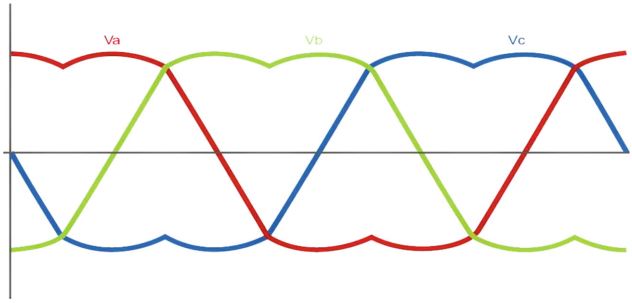

Fig. 6. SVPWM voltage wave form Va, Vb and Vc

3.6 Sinusoidal Voltage and SVPWM

The Clarke inverse transform scenario gives the three-phase voltage the matching channel duty cycle (PWM). These duty cycle numbers are utilised directly for phase voltage excitation. The SVPWM algorithm may be used in a variety of ways. In this implementation, a basic technique similar to the conventional modulation scheme is implemented. The neutral voltage is determined using the instantaneous normal values of the minimum and outer voltages of all three-phase voltages, according to this method. Furthermore, the immediate three-phase voltage attenuates this instantaneous voltage neutralization shown in Fig. 5. and Fig. 6.

The following technique is utilised for SVPWM:

V_{off} is equal to minimum value of Va,Vb and Vc adding to maximum value of (Va,Vb and Vc) /2.

3.7 PWM Generation

The sample design allows for 3-phase edge-aligned PWM production. To avoid short circuiting of the drive's top and bottom switches, dead time enable logic is enabled. On the side switch, a total of six PWM signals were generated, three on the high side and three on the low side. The inverter's analogous branching is completed by the PWMs for the top and bottom switches shown in Fig. 7

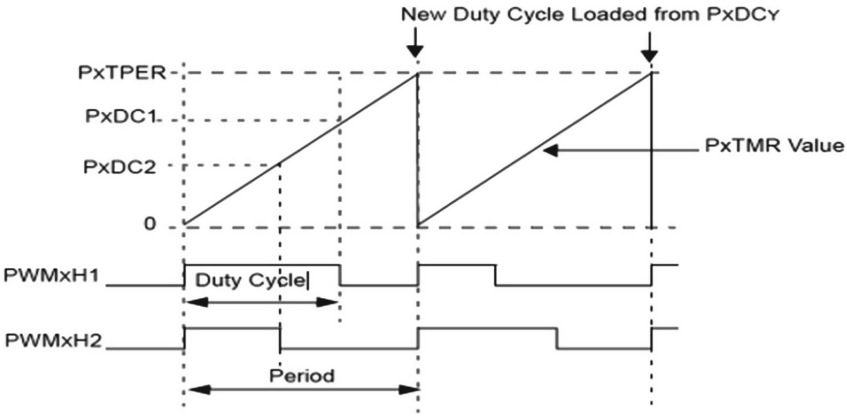

Fig. 7. Operating concept of PWM with edge alignment

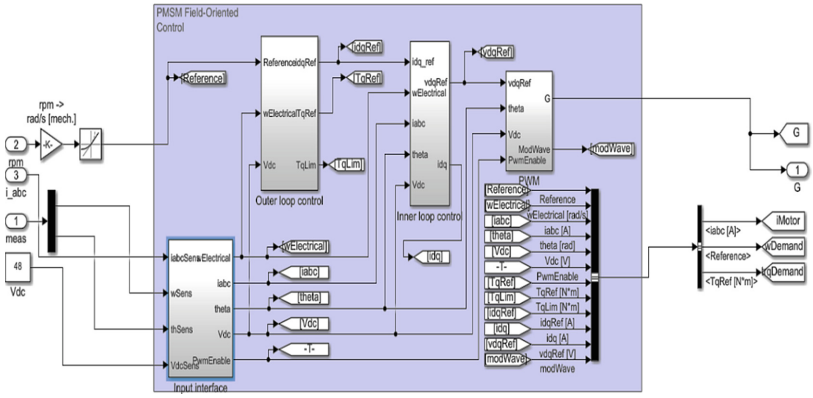

Fig. 8. PMSM controller Simulation

4 Simulation

4.1 PMSM controller

For permanent magnet synchronous machines simulation shown Fig. 8. The PMSM FO Control block supports a field-oriented control architecture (PMSMs). Field Oriented Control (FOC) shown in Fig. 9. is an efficient AC motor control approach that separates torque and magnetic flux by converting a fixed-phase current into a revolving frame. If the rotor speed and location are known, and the application calls for high torque and low current during start-up and extremely efficient.

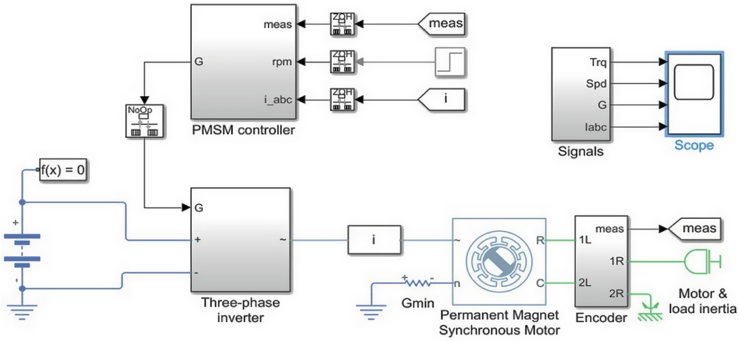

Fig. 9. PMSM field-oriented control simulation

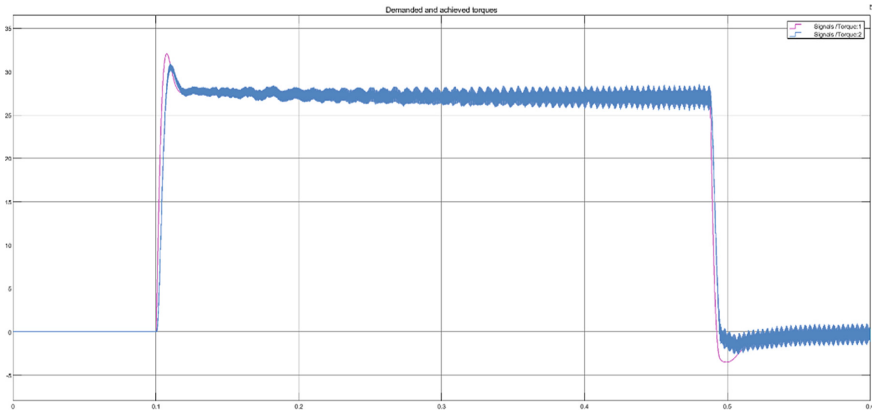

Fig. 10. Simulation result of effectiveness of torque control

5 Results

On a three-phase inverter with a baseline step of 0.6 s to 1 s, the effectiveness of torque control was experimentally examined. Both axes have conventional controllers that can follow their respective assignments with quick dynamics and no overshoot shown in Fig. 10.

Figure 11 shows the phase currents for each phase, the current on the d-axis is zero, whereas the current on the q-axis corresponds to the phase current's envelope.

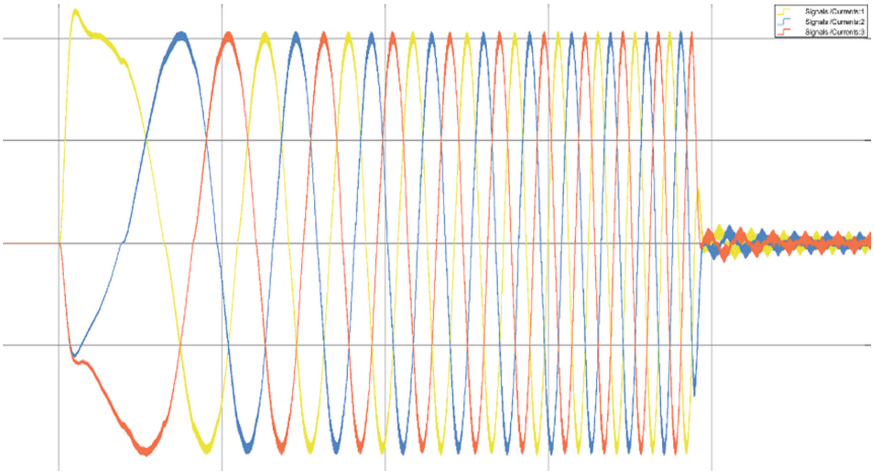

Fig. 11. Phase currents waveform

6 Conclusion

PMSM motors are gaining in popularity, and the most up-to-date and efficient control algorithms will further strengthen their position as a suitable and cost-effective alternative to older induction motors. The usage of a PMSM (FOC) drive system yields the greatest results in both simulation and real-world applications, with little to no speed and torque variations that are consistent with the results.

References

1. S. Sathiakumar, S. K. Biswas and J. Vithayathil, "Microprocessor-Based Field-Oriented Control of A CSI-Fed Induction Motor Drive," in IEEE Transactions on Industrial Electronics, vol. IE-33, no. 1, pp. 39–43, Feb. (1986), doi: https://doi.org/10.1109/TIE.1986.351703.
2. Faisal Amin, Erwan Bin Sulaiman, Wahyu Mulyo Utomo, Hassan Ali Soomro, Mahyuzie Jenal, Rajesh Kumar "Modelling and Simulation of Field Oriented Control based Permanent Magnet Synchronous Motor Drive System" Indonesian Journal of Electrical Engineering and Computer Science, Vol. 6, No. 2, pp 387- 395, May (2017),
3. Ahmed Farhan, Mohamed Abdelrahem, Amr Saleh, Adel Shaltout, Ralph Kennel "Simplified Sensor less Current Predictive Control of Synchronous Reluctance Motor Using Online Parameter Estimation" Energies 13(2), 492 (2020), https://doi.org/10.3390/en13020492 - 19 Jan 2020.
4. R. Krishnan, "Electric Motor Drives: Modeling, Analysis, and Control," Prentice-Hall, Upper Saddle River, (2001).
5. Bimal K. Bose, "Power Electronics and Variable Frequency Drives" Wiley-IEEE Press IEEE-1997

Open Access This chapter is licensed under the terms of the Creative Commons Attribution-NonCommercial 4.0 International License (http://creativecommons.org/licenses/by-nc/4.0/), which permits any noncommercial use, sharing, adaptation, distribution and reproduction in any medium or format, as long as you give appropriate credit to the original author(s) and the source, provide a link to the Creative Commons license and indicate if changes were made.

The images or other third party material in this chapter are included in the chapter's Creative Commons license, unless indicated otherwise in a credit line to the material. If material is not included in the chapter's Creative Commons license and your intended use is not permitted by statutory regulation or exceeds the permitted use, you will need to obtain permission directly from the copyright holder.