Applications of a Clamping Joint in a Rail Vehicle Design

Lukáš Hruzík(✉), Jiří Struž, Jiří Začal, and Květoslav Kaláb

Department of Machine Parts and Mechanisms, VSB – TU Ostrava, 17. Listopadu 2172/15, 708 00 Ostrava, Czech Republic
lukas.hruzik@vsb.cz

Abstract. This paper deals with design problematics of a clamping joint for the tanker frame in a rail vehicle. This car body is made from aluminum alloy. The main requirement of the joint is safe transmission the load given by the norm ČSN EN 12 663-1. At the beginning of the study is make the analysis of friction properties on individual contact surface. Below problematics calculation of a stiffness joint components. Using these input data is calculation minimal bolt pretension in the connection. Next part is determining inputs for joint strength check.

Keywords: Clamping Joint · Water Tank · Frame · Aluminium Alloy · Rail Vehicle

1 Introduction

For connection main car body with a frame for other devices in practice using must often bolt joint with through bolt or joining with C profile. Disadvantage bolt connection with through bolt are high demands for accuracy for hole drilled to the main car body. In this article I deal with mounting the water tank frame. The frame is made from steel. At connection aluminum alloy and other metal is important prevent to contact corrosion. This corrosion is very dangerous and inadmissible on main car body. The corrosion protection has very impact for friction analysis, therefore Corrosion protection precedes the frictional analysis. The strength check was doing using combination FEM and analytical method. Analytic method is not listed in the article. The analytical method is ordinary in machine parts and mechanical design. This article deals primary determining inputs for strength check.

2 Materials and Methods

All forces that are created by acceleration and deceleration of vehicle are transmitted over eight identically clamping joints. Frame is symmetry, for this reason should not be created forces outside the frame axis and not be going to creation torque at the joints. Acceleration in each direction is given norm and must be assessed separately in each direction. Acceleration is defined for two situations at overload and load from normal running. These accelerations established norm ČSN EN 12 663–1 [1] (Table 1 and Figs. 1, 2, 3).

J. Homišin et al. (Eds.): ICMD 2020, AHE 17, pp. 105–116, 2023.
https://doi.org/10.2991/978-94-6463-182-1_13

Table 1. Acceleration values [1].

Overload values		Fatigue values	
Direction	Acceleration	Direction	Acceleration
X axis	$\pm 3 \cdot g$	X axis	$\pm 0{,}15 \cdot g$
Y axis	$\pm 1 \cdot g$	Y axis	$\pm 0{,}15 \cdot g$
Z axis	$(1 \pm c) \cdot g = (1 \pm 2) \cdot g = 3 \cdot g$; $-1 \cdot g$	Z axis	$(1 \pm 0,15) \cdot g$

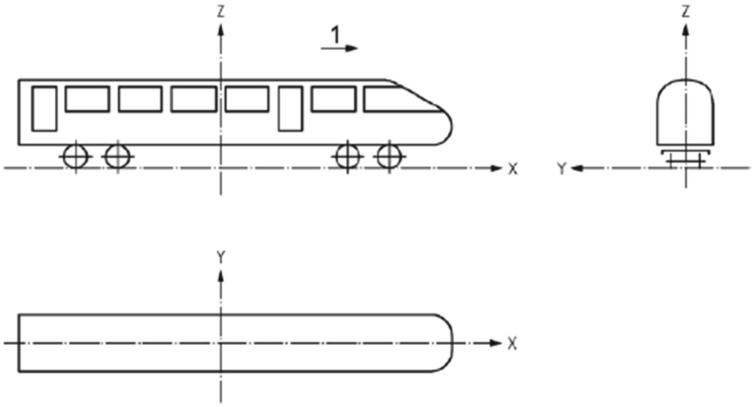

Fig. 1. Vehicle axis system [1]

Fig. 2. Water tank frame

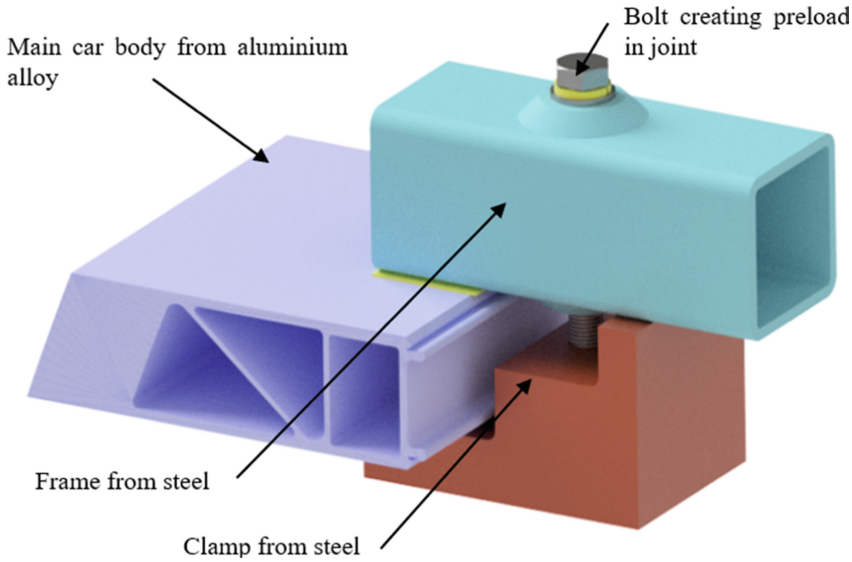

Fig. 3. Description of the clamping joint

2.1 Calculation Procedure and Results

For calculation was used FEM and analytic method in combination. The FEM is used for determination of input for analytical equation.

2.2 Determinate the Stiffness of Flange and Bolt

The bolt realizing preload is loaded also dynamically axis force. For solving that loading bolt is important stiffness each system part.

Due to simple bolt shape is possible the stiffness solving analytically. The flange stiffness analytically is in this case very complicated, to stiffness is counted stiffness the steel profile of frame, stiffness main car body from aluminum alloy, but also clamp stiffness. As optimal as it may seem determination of stiffness from experiment. For the sake of cost reduction, stiffness was determined only by FEM simulation of this construction node. The deformations detected by the analysis are deformations in the direction of the bolt axis. The total deformation is the sum of the deformation of the clamp at the point of the thread in absolute value, because of the coordinate system chosen, the deformation of the clamp is negative, and profile at the point where it is touching the bolt head. To increase the stiffness of the profile at the point of the bolt, a steel insert was welded into the profile, through which the bolt passes. The stiffness of the flanges is calculated from this overall deformation. As the proportion of the known bolt pretension force and deformation analysis detected. Stiffness was calculated for several values of the force in the bolt (Figs. 4, 5, 6 and Table 2).

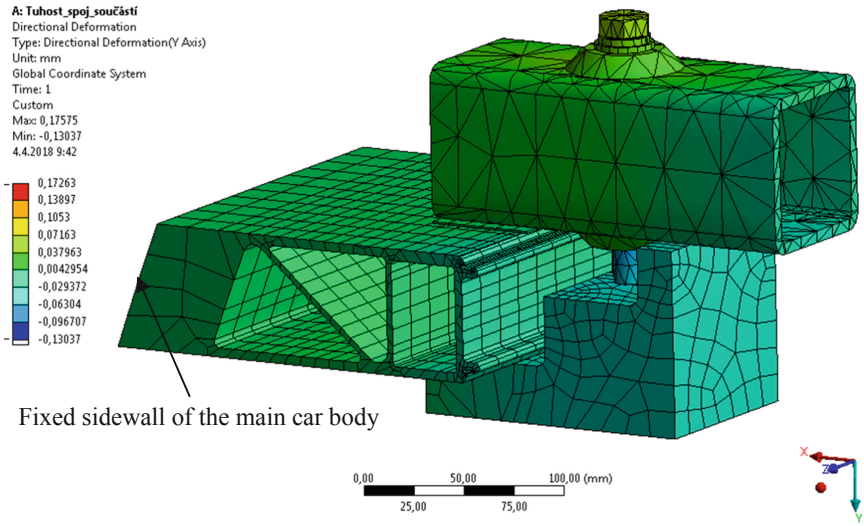

Fig. 4. Deformation of the whole model in the direction of the bolt axis.

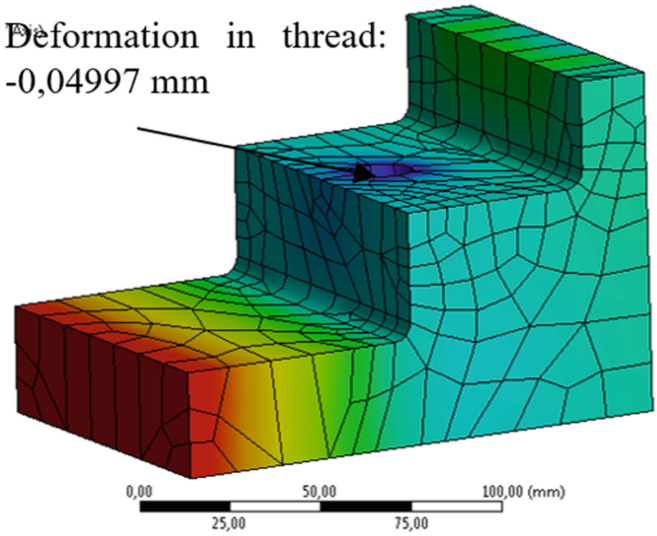

Fig. 5. Detailed view of deformation of the clamp at a load of 60000 N, in the direction of the bolt axis.

2.3 Contact Corrosion

Before analyzing the frictional properties of the individual surfaces, it is necessary to consider the methods of preventing contact corrosion. These methods significantly change frictional properties on individual surfaces. Critical is the place where a main body relates to a frame, or a clamp. In these places contact corrosion can occur, which

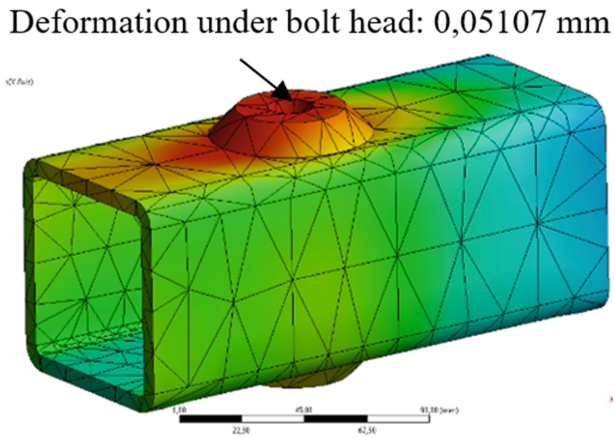

Fig. 6. Detailed view of the frame profile deformation at a load of 60000 N in the direction of the bolt axis.

Table 2. Flange stiffness.

Force in the bolt [N]	Profile deformation [N]	Clamp deformation [N]	Total deformation [N]	Stiffness [N·mm^{-1}]
20000	-0,01702	0,01666	0,03368	5,938 · 10–5
30000	-0,02554	0,02499	0,05052	5,938 · 10^{-5}
40000	-0,03405	0,03331	0,06736	5,938 · 10^{-5}
50000	-0,04256	0,04164	0,08420	5,938 · 10^{-5}
60000	-0,05107	0,04997	0,10104	5,938 · 10^{-5}

Resulting stiffness $C_p = 593\ 800$ N·mm−1

is dangerous especially from the point of the main car body construction, where is made of aluminum alloy. Aluminum alloy is less corrosion material than steel. In extreme cases, corrosion cracking can occur, where is unacceptable. Anticorrosive protection of the frame by painting appears to be inadequate due to vibrations that could occur on a main body. These vibrations could disrupt the anti-corrosion painting. Therefore, another method of preventing corrosion has been made. A thin sheet of stainless steel is inserted between the frame and the main car body. This steel does not react either with an aluminum alloy of a main car body or with a steel frame. Off course the frame will be have an anti-corrosion coating. Corrosion in contact with clamps and main car body was prevented by the plating of the clamp. The best material for plating clamps seems to cadmium. This metal does not normally react with aluminum alloys. Its further advantage is the relatively good friction properties of the thread when using a cadmium platted bolt. Acceptable metal plating is Zinc, where is economically and ecologically material than Cadmium (Fig. 7).

M - Marine Atmosphere
I - Industrial Atmosphere

• Unfavorable - Ga
o Compatible - No C

		Zinc, Zinc Coating	Cadmium, Beryllium	Aluminum, Mg-Coated Aluminum, Zn-Coated Aluminum
Magnesium	M	o	o	•
	I	o	o	•
Zinc, Zinc Coating	M		o	o
	I		o	o
Cadmium, Beryllium	M			o
	I			o
Aluminum, Mg-Coated Aluminum, Zn-Coated Aluminum	M			
	I			

Fig. 7. Contact corrosion [4].

2.4 Friction Analysis

Friction coefficient on areas is different depending on the materials involved in the contact. Despite all eight clamping joints must pass a total inertia force exerted by the weight and acceleration. For simplicity and for increased safety, a steel-steel friction coefficient for the dry friction coefficient was applied in contact with a stainless-steel plate with a frame and a frame clamp, without including anticorrosion protection of the frame. This anti-corrosion protection should increase the value of the shear friction coefficient.

I assume transfer using two friction surfaces labeled 1 and 2 in Fig. 8 Friction analysis. On surface 3 is the coefficient of friction $f_{steel\text{-}aluminum}$, which is higher than on area 2 where the coefficient of friction is $f_{steel\text{-}steel}$, therefore occurs before slipping on the surface 2 than 3. The dimensions of the clamp are also affected by this assumption. The total friction is the sum of the friction force generated by the F_{upA} force on the surface 1 with the coefficient of friction $f_{steel-steel}$ and friction-induced F_{upB} force on area 2 by coefficient $f_{steel-steel}$. It is necessary to determine the force that must act on the bolt axis. This force was determined using these three equations with three unknowns. This is the equation of equilibrium if we replace the clamp with a statically specific beam with reaction F_{upA} a F_{upB}.

F_{tb} = the frictional force is multiplied by the slip safety relative to one joint.

$$F_{tb} = F_{upA} \cdot f_{steel-steel} + F_{upB} \cdot f_{steel-steel} \tag{1}$$

$$F_{upA} = \frac{F_{ps} \cdot \left(l_{up} - a_{up}\right)}{l_{up}} \tag{2}$$

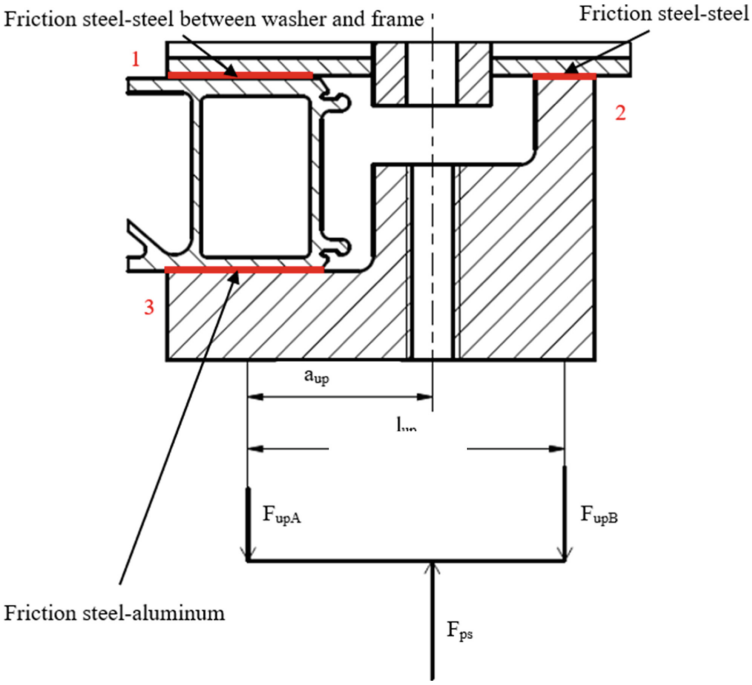

Fig. 8. Friction specification.

$$F_{upB} = -F_{upA} + F_{ps} = -\frac{F_{ps} \cdot (l_{up} - a_{up})}{l_{up}} + F_{ps} \tag{3}$$

Resulting equation for calculation of axial force in the bolt contains only the coefficient of friction $f_{steel-steel}$ and one unknown, which is the axial force in the bolt F_{ps}.

3 Results and Discussing

It is a preloaded screw joint loaded with axial force. To calculate the total force in the bolt, a diagram of the pre-load bolt is required. First, it is necessary to determine the preload so that the frame does not shift when the load is in the longitudinal direction. In this case, the input is the minimum required force at the point of contact between the

main car body and the frame.

$$F_{tb} = F_{upA} \cdot f_{steel-steel} + F_{upB} \cdot f_{steel-steel} => \frac{F_{ps} \cdot (l_{up} - a_{up})}{l_{up}} \cdot f_{steel-steel}$$
$$+\left(-\frac{F_{ps} \cdot (l_{up} - a_{up})}{l_{up}} + F_{ps}\right) \cdot f_{steel-steel} => \frac{F_{ps} \cdot (l_{up} - a_{up})}{l_{up}} \cdot$$
$$f_{steel-steel} - \frac{F_{ps} \cdot (l_{up} - a_{up})}{l_{up}} \cdot f_{steel-steel} + F_{ps} \cdot f_{steel-steel} = F_{ps} \cdot f_{steel-steel} \tag{4}$$

where is the minimum axial force in the flanges, this force is based on the need for safe transfer from the frame to the main body construction. Also enter into the calculation work force in the bolt axis, which acts on the screw in this direction of loading and reduces the pressure in the flanges. F_{ps}. is a minimal needed force in bolt in a critical situation for frame shift. This is usually the X direction. F_{work} is a force calculated from the FEM analysis the frame in the same situation. By entering other diagrams, the already known axial force in the bolt is already known in the unloaded condition. The individual diagrams have considered the forces acting on the bolt in different load directions. Of all these directions, the most critical direction was chosen for both one-off overload and for terms of fatigue. For these critical directions were checked. $F_{workmax}$ is a maximal working force in the bolt calculated from the FEM analysis.

For the determination of forces, it appears to be an optimal calculation mod of FEM, which also considers the stiffness of the frame itself. The water reservoir was replaced by a mass point. Due to the symmetry of the frame, only half of it could be modeled and symmetry applied, which accelerated the calculation (Fig. 9).

Inspection was always performed for the most lightweight joint. In this case the bolt is loaded with additional tensile axial force. Furthermore, the calculation procedure is the same as for another bolt loaded with axial force (Figs. 10, 11).

Fatigue is also performed in a common way, with the standard setting such a high number of cycles that the only realistic calculation method is the calculation for an unlimited fatigue. The norm gives minimal 10^7 cycles. This can be done, for example, by [3]. Either by Haigh, or the Smith diagram (Fig. 12).

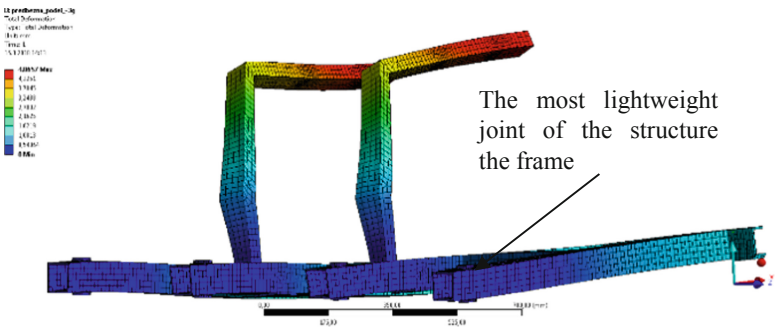

Fig. 9. Analysis for work forces.

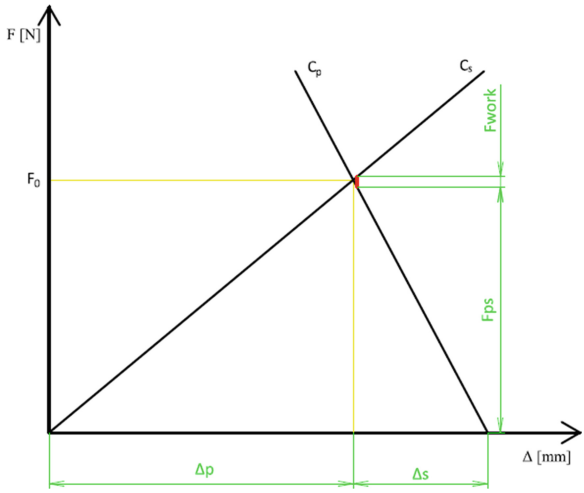

Fig. 10. Bolt pretension diagram

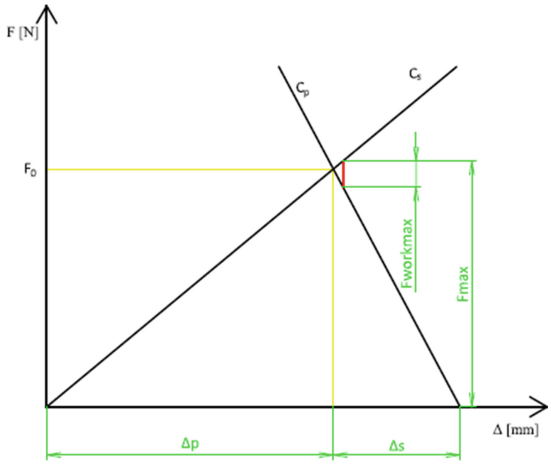

Fig. 11. Bolt pretension diagram form maximal bolt force

Each load direction is to be evaluated separately and to calculate independently for each load direction. Both for overload and fatigue.

3.1 Clamp Check

The clamp is loaded similarly to the screw, but in the case of a clamp the nominal stress is the bending stress caused by the axial force in the bolt. The clamp is to be checked for a single overload, but also to check the fatigue again for an unlimited fatigue (Fig. 13).

When calculating the life of the clamp, the load cycle must be considered. Due to the prestress of the bolt and the working force, this is a pulsating load cycle that needs to

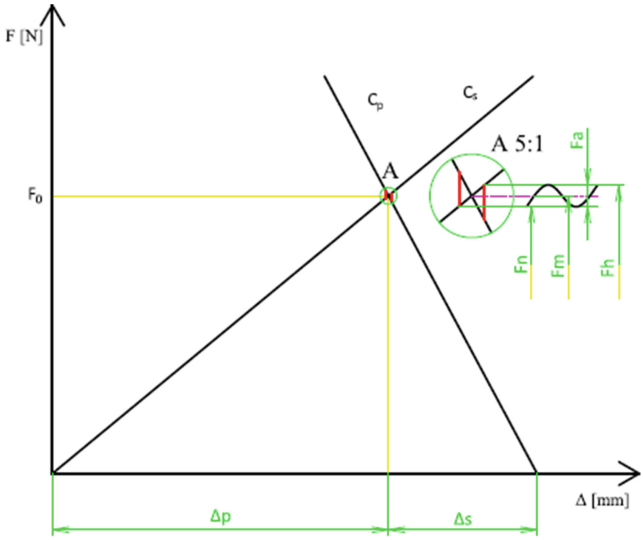

Fig. 12. Bolt pretension diagram for fatigue.

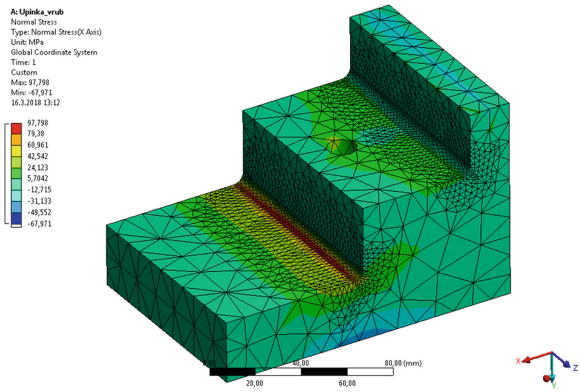

Fig. 13. Clamp FEM analysis.

be addressed either by the Haigh or Smith diagram. In the case of a clamp, the bending stress is the dominant stress. The skid component is negligible. The calculation was based on [2]. For the fatigue explain is needed the β coefficient of notch toughness. This coefficient was explained from FEM analysis from α coefficient of stress concentration this notch. Conversion α to β can be done for example Thumb method, Neuber method and more.

3.2 Checking Pressure

It is necessary to check the allowable pressure at the clamping joint. This check is to be carried out both in the pressure joint of the clamp and the steel profile. This is where larger

problems with the allowable pressure are not expected, since the allowable pressure for the steel profile is relatively large. A bigger problem arises in the pressure contact of the clamp or the frame and main body construction. The main car body made of aluminum alloy has a relatively low allowable pressure. The main risk in this joint is creep. Due to this flow of material, the preload in the joint and its breakage could be reduced, which could have fatal consequences.

4 Conclusions

It follows from this article that the use of a clamping joint on a main car body structure is possible. However, it is necessary to observe certain principles so as not to make the connection inoperative. An important requirement is to prevent contact corrosion at the joint site. Equally important is to adhere to the allowable pressure, especially on the rough construction of the vehicle. The other parts of the design are comparable to other conventional clamping applications. The specificity of rail transport is the number of standards, in which case we are primarily concerned with the standard EN 12 663-1. Fatal consequences for the joint may have manufacturing inaccuracies, especially in the case of clamps where, due to production tolerances, an additional bending moment in the bolt. This torque may cause the bolt to break and thus break the joint.

References

1. ČSN EN 12 663–1 Železniční aplikace Pevnostní požadavky na konstrukce skříní kolejových vozidel: Část 1: Lokomotivy a vozidla osobní přepravy (a alternativní metoda pro nákladní vozy)Praha: Ústav pro technickou normalizaci, metrologii a státní zkušebnictví, 2015.
2. MORAVEC, Vladimír a PIŠŤÁČEK, Daniel. Pevnost a životnost dynamicky namáhaných strojních součástí: Vybrané statě. Ostrava: Vysoká škola báňská - Technická univerzita Ostrava, 2013.
3. KALÁB, Květoslav. Návrh a výpočet dynamicky namáhaného šroubu přírubového spoje: Vysokoškolská příručka Vysoká škola báňská – Technická univerzita Ostrava, 2013, Ostrava [online]. [24.3.2018]. Available from https://www.fs.vsb.cz/export/sites/fs/347/.content/files/predmety/kal01/prirucka-dynamickysroub.pdf
4. NOVÁK, Pavel. Koroze kovů Ústav kovových materiálu a korozního inženýrství, Fakulta Chemické technologie, VŠCHT, 2018, Praha [online]. [24.3.2018]. Available from -http://ukmki.vscht.cz/files/uzel/0016736/Koroze%20kov%C5%AF.pdf?redirected