Development of the Modular DC Fast Charging Station for Electric Vehicles

Lukáš Hubka, Petr Školník, Jiří Kubín

Technical University of Liberec, Studentská 2, 46117 Liberec, Czech Republic
lukas.hubka@tul.cz

Abstract. This paper is focused on a newly developed DC charging station that allows the change of configuration to the requirements of recharged vehicles. The first part of the paper discusses the main pros and cons of different types of charging stations with a combination of different types of EVs like BEVs, PHEVs, or HEVs. The discussed types of charging stations are now in commercial use. The second main part of the paper is focused on developing of prototype DC charging station which allows to dynamically change the configuration of power source modules to the requirements of connected EVs. In the paper, the concept of the multi-vehicle charging station is introduced and solutions to some specific problems in the pre-charging and charging phase are described.

Keywords: DC charging station, electric vehicle, charging station construction.

1 Introduction

One of the main growing problems of this time is environmental sustainability [**Error! Reference source not found.**]. The number of inhabitants continues to grow worldwide and with it the number of cars in use. At the same time, according to studies, up to a quarter of the world's greenhouse gas emissions come from transport [**Error! Reference source not found.**]. Global warming then clearly points to the need for EVs, as fossil fuels are often identified as the source of greenhouse gases and global warming. In recent years, cars that take energy for their operation from batteries have been supported worldwide. Many European countries have an extensive system of tax discounts and concessions for the purchase and operation of an electric vehicle. But there is still a significant deficit in infrastructure. The number of charging station - posts still cannot cover the growing number of electric cars [**Error! Reference source not found.**]. Fast charging stations can significantly shorten charging times, thus improving user comfort for electric vehicle owners and thus minimizing the often-mentioned shortage of electric cars compared to conventional ones. Therefore, massive development and expansion of the number of fast charging stations are expected in the coming years. the design of charging stations will be optimized to improve further the comprehensive charging service capability of the fast-charging network.

M. Petr et al. (eds.), *62nd International Conference of Machine Design Departments (ICMD 2022)*, Atlantis Highlights in Engineering 28,
https://doi.org/10.2991/978-94-6463-423-5_26

2 The DC Fast Charging Station

Having your own charging station means implementing your own development, penetrating into the specifics of communication between the vehicle and the station, uncovering the details of the electrical connection of the station, and examining existing standards and legislation. In general, it is possible to classify electric vehicles and their charging method according to several criteria. One of the most significant ways of dividing is by connector type. There are three types of DC fast charging systems, depending on the type of charge port on the vehicle: SAE Combined Charging System (CCS), CHAdeMO, and Tesla [4]. The CCS connector (also known as SAE J1772 combo) is unique because a driver can use the same charge port when charging with AC Level 1, Level 2, or DC fast charging equipment. The only difference is that the DC fast charging connector has two additional bottom pins. Most EV models entering the market today can charge using the CCS connector.

In our article, we deal exclusively with DC charging of battery electric vehicles (BEVs) in the CCS standard, where the charging station has primarily commercial potential [5].

EVs can be divided into three basic categories which are battery electric vehicles (BEVs), plug-in hybrid electric vehicles (PHEVs), and hybrid electric vehicles (HEVs). Compared to BEVs, PHEVs and HEVs charge their batteries while driving, so they do not need an external charging station. In contrast, BEVs need a charging station and thus the entire charging infrastructure [6].

Looking at the current trends and technological possibilities, it is absolutely obvious to construct a DC charging station that has the potential of being able to charge quickly and minimize losses in the entire charging process. The charging station should therefore have a direct current for powering the electric car and thus enable so-called fast charging. One of the essential advantages of a DC charging station is the amount of current that can be supplied to the batteries of the electric car, which makes it possible to shorten the charging process significantly. The reason for this advantage is the internal equipment of the electric car when in the case of AC charging, the electric car has to convert alternating current into direct current with the help of its own onboard charger. On-board charger – the converter is designed only for low currents to save production costs and weight. In the case of DC charging, there is no need to use the onboard equipment of the electric vehicle and only with the help of the internal battery management system (BMS) to supply energy directly to the battery. The power supply is controlled by the instructions of the vehicle's control system and is defined by the standard. The disadvantage of a DC charging station is its technological complexity and the necessity of the ability to communicate with the vehicle. In the future, large one-time current consumption can also be included among the disadvantages, which causes an increased load on the external power grid [**Chyba! Nenalezen zdroj odkazů.**]. The advantages of DC stations must prevail over AC charging stations since charging speed is one of the much-discussed factors in electromobility. DC charging stations still have the potential for further growth in this direction, although they are still a minority. Even though, with current materials, we are reaching the edge with the maximum electrical energy supply due to current limitations, there is still room for higher voltages. The

current limitation is a logical consequence of the laws of physics because when a large amount of energy flows through the conductors, considerable heat is generated, which not only thermally stresses the entire cable, causes losses, but above all, threatens the danger of thermal breakdown. The most powerful cables are therefore equipped with an internal cooling circuit and thermal protection. [9] The cables contain thermal sensors informing the current thermal stress of both the fork and the wires. We can observe the trend towards a higher on-board voltage in studies and the latest models of electric vehicles of the world's largest car manufacturers (e.g., Mercedes VISION EQXX has an on-board voltage of 900 V, Porsche Taycan, Audi e-tron GT, Hyundai Ioniq 5, Kia EV6 have an on-board voltage of 800 V). There is a simple motivation for a significant increase in charging speed, e.g., the Porsche Taycan needs to be powered from a 400V 50kW charger for 90 minutes to charge its batteries from 5% to 80%, whereas only 22.5 minutes when powered from an 800V 270kW charger! It should be noted that very fast charging accompanied by high current requirements also has negative aspects, which are manifested in the external power supply network in the form of current peaks, increased load on transformers, the occurrence of higher harmonics, and voltage fluctuations.

3 The Construction

A modular approach in the area of DC current production was chosen for the construction of the own charging station. The UR50060 power source is used as the basic building unit, which is constantly capable of supplying 500 V/60 A, i.e. 30 kW [10]. The module is equipped with an advanced communication interface, so it can control and monitor it externally. Communication can take place both on the outdated MODBUS RS485 interface and on the more advanced CAN interface, which, among other things, allows for achieving much higher data flows. The vehicle is connected with a power cable from PhoenixContact, which has internal cooling and can thus transmit up to 500 A at 1000 V. The cable has a CAN communication interface, which serves to operate the cable, read data from built-in sensors, and monitor the current status of the cable. The cable is designed for DC charging with support for the CCS standard. This standard enables the exchange of data between the electric vehicle and the charging station and provides a communication interface for the charging process.

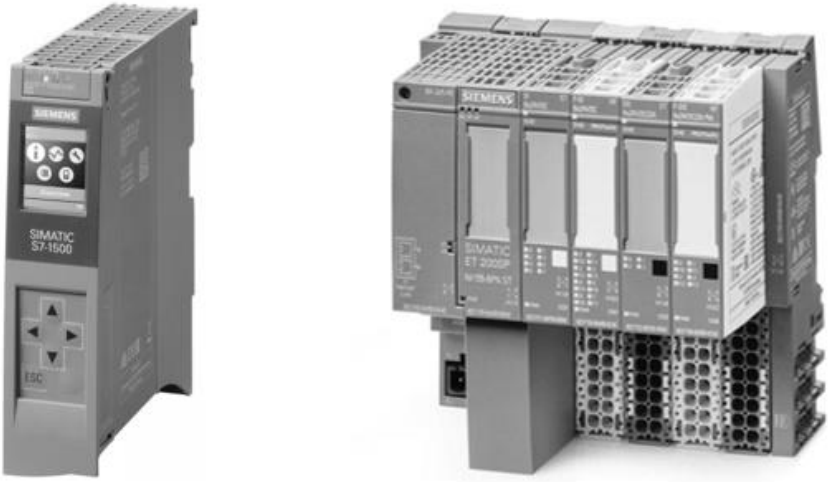

Fig. 1. Simatic S7-1500 PLC system and ET200 communication module (www.siemens.com)

Siemens S7-1500 series PLC was chosen as the central element of the charging station control system. Deploying a PLC to control a charging station is already standard today. The industrial PLC can meet the high demands on reliability and operational safety without difficulty and is thus the most suitable candidate for a central control element. Another advantage of PLC is the availability of all used buses and the existence of working and verified modules for communication with the car via CCS. In addition, it is also possible to consider expanding the PLC with a display unit and other elements of the interface between the charging station and the customer (card reader, etc.). In our charging station prototype, the central PLC processor of the S7-1500 series is supplemented with an external ET200 communication module, which houses all the necessary modules for communicating with peripherals and operating the digital inputs and outputs of the charging station's internal equipment.

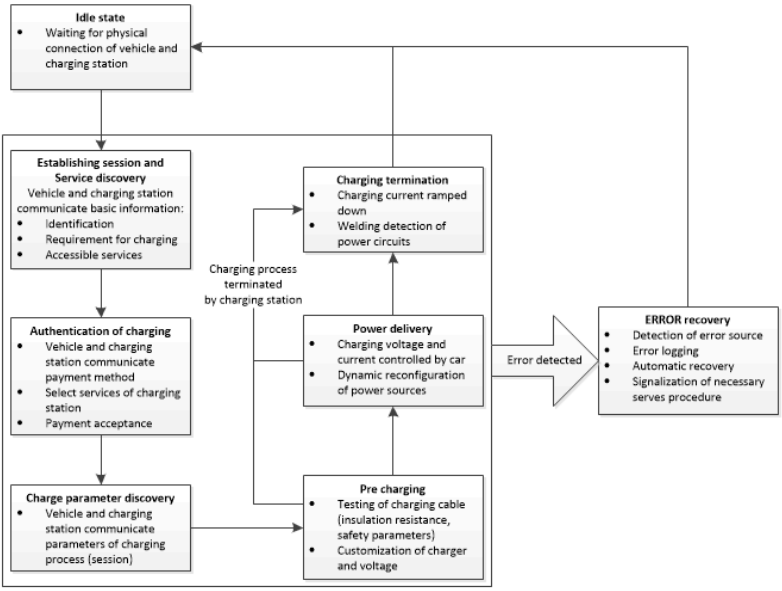

Fig. 2. Charging process diagram

The external communication module, which enables a whole series of expansion modules to be connected to the control PLC via the Profinet standard interface, in our specific case of the proposed charging station system, is equipped with expansion modules for CAN bus communication (SIMATIC ET 200SP CM CAN module). These modules make it possible to configure and obtain information about the states of the UR50060 electrical power sources. Furthermore, CAN bus communication is used to monitor the state of the PhoenixContact charging cable. The peripherals of the basic module are extended by digital input and output modules, which in the prototype charging station enable control of contactor logic for connecting, and disconnecting electrical power sources and their operation in individual modes (charging phases). Finally, the system of distributed peripherals is extended by a module (SIMATIC ET 200SP TM ECC PL ST), which enables communication with the charging vehicle via the CCS (Combined Charging System) standard via the PhoenixContact charging cable. This makes it possible to exchange data between the charging station and the vehicle and to configure the parameters of the charging station according to the requirements of the vehicle, or it is possible to use extension functions for disconnecting the power source from the vehicle.

The modular concept of the charging station presupposes specific control and HW configuration of the power supply modules. By default, DC charging stations capable of charging multiple cars simultaneously are configured according to **Fig. 3.** Charging Station utilizing grid power strategies. Assuming that the station is powered only by the AC network and there is no other source of electrical energy such as photovoltaic panels, the topology of the station is designed to have one common DC bus. This DC voltage is generated on the AC-DC converter. Each charging cable is then connected to the

bus via a DC-DC converter. In our modular concept, we do not use one common DC bus (**Fig. 4**). Instead, by appropriately controlling the individual power modules (AC-DC converters) and their appropriate connection, we configure the parameters of the charging station to order for each connected vehicle. Of course, with the maximum available joint performance limitation, which customers must share according to the rule, the first connection has the right to a larger share (60%). The station configuration is controlled by an algorithm in the PLC.

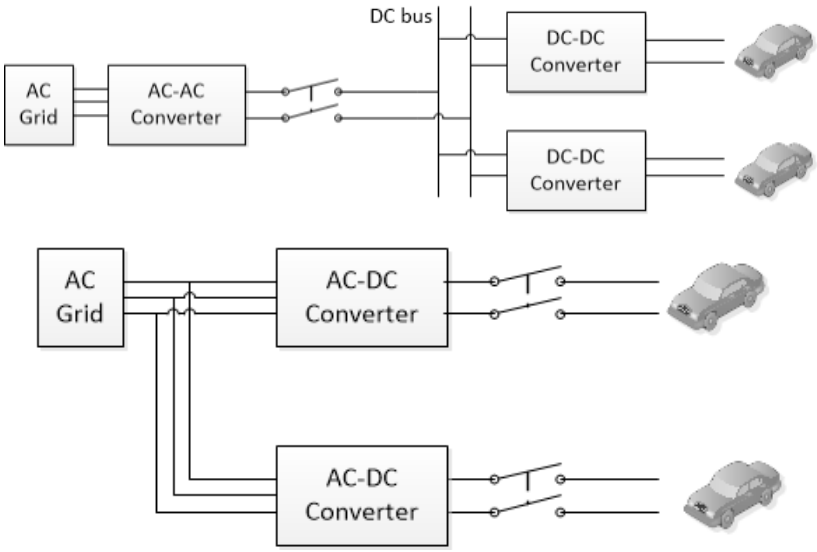

Fig. 3. Charging Station utilizing grid power strategies

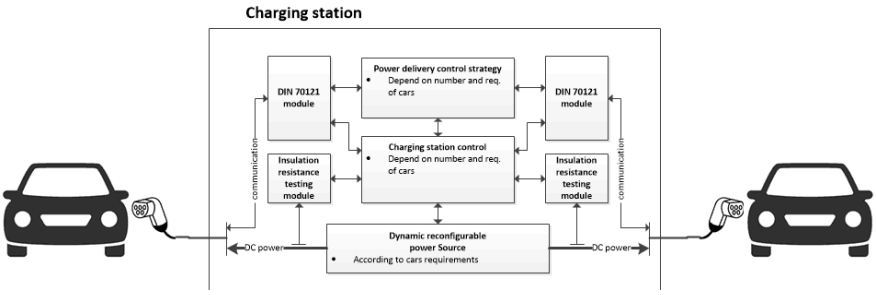

Fig. 4. Internal block structure of DC station

A specific challenge is the effort to achieve partial independence from Siemens HW and SW in the area of the display unit and to use more affordable means while maintaining the comfort of operating the station on the part of the customer and the safety of operation on the part of the designer and the operator of the station. Instead of standard Siemens HMI display units, a display panel working with a Raspberry Pi computer was chosen.

4 Operational Tests of Charging Station

The UR50060 source, as mentioned, has a CAN communication interface. Although CAN communication is fully supported by Siemens, it does not belong to the main standards. So, software support exists, but it is not as sophisticated and detailed as other communication protocols. Connecting several sources turned out to be completely realistic and reliably functional. Resources can be configured into groups, and each module in the group can be controlled centrally with group commands. This is an advantage for the intended modular concept. The disadvantage is internal communication between sources, which was revealed thanks to detailed analyses. This internal communication causes an increase in the data load on the CAN line and is classified as a potential risk in the further expansion of the charging station. Resources require fairly intensive communication in the form of a regular life beat. On the side of the control program, continuous monitoring of the current status of each of the modules is required, which is planned especially during the charging process at a higher intensity, i.e. with a shorter period of reading messages.

Fig. 5. UUGreenPower UR50060 Power Supply (www.uugpower.com)

In addition to the DC-controlled power supply modules, there is a charging cable for supplying electrical energy to the vehicle on the same CAN communication line. Data communication with the cable is extensive, as information from sensors in the plug, sensors in the cable, status information, cooling information, and more is constantly being transmitted. The procedural disadvantage is the necessity of reading each message separately at its own address instead of a complete data file.

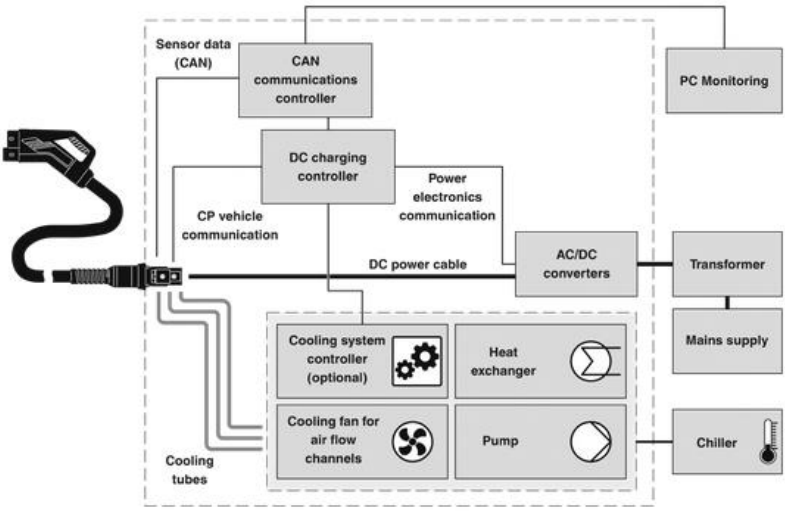

Fig. 6. DC charging cable from PhoenixContact and its connection (www.phoenixcontact.com)

5 Safety

Safety is a critical factor for the successful operation of a charging station. During construction, it is, therefore, necessary to comply with all safety regulations and standards that describe how the charging station can be constructed and operated. From the point of view of compliance with the principles of electrotechnical safety at DC charging stations, we have to face the problem from two sides. Power supply and DC output safety side. Both sides are covered by the harmonized electrotechnical standard ČSN EN 61140 ed. 3. This standard forms the basic standard for all electrical equipment, regardless of voltage level and type of environment in which the electrical equipment is located. If it concerns the input power supply part, it is covered by the standard from the set of standards ČSN 33 2000 for low voltage electrical installations and part 7 Single-purpose devices and in special cases, created directly for this specific case with the entire marking ČSN 33 2000-7-722 ed. 3 - Low-voltage electrical installations - Part 7-722: Single-purpose devices and, in special cases - Power supply of electric vehicles. This standard is, of course, based on the above-mentioned standard ČSN EN 61140 ed. 3 and specifies the requirements for this specific type of electrical equipment, i.e., the conditions for their connection. The safety requirements on the output side of the charging station are dealt with by the standard from the set of standards ČSN EN 61851 entitled System for charging electric vehicles by conductive connection, and our case concerns the specific standard ČSN EN 61851-23 with the complete name System for charging electric vehicles by conductive connection, part 23: DC charging station. And in the DC part, we must not forget ČSN EN ISO – 17409 Electrically driven road vehicles – Connection to an external electrical energy source – Safety requirements. This standard is crucial for creating a charging station, as it sets the safety requirements

when connecting an electric car to the charging station and thus the safety conditions during actual recharging.

If it concerns the requirements arising from the standard ČSN EN 611140 ed. 3, so the main principles of safety and the interpretation of basic terms follow from them, i.e., the obligation to carry out essential protection, protection in the event of a fault, if necessary, additional protection and what to imagine after these terms. Furthermore, this standard results in the obligation to secure, i.e., the basic rule of protection against electric shock, i.e., that dangerous live parts must not be accessible, and accessible conductive parts must not be dangerous live, neither under normal conditions nor under conditions of a fault. The minimum coverage requirements are also described here. These general principles must be strengthened in the given case concerning the requirements of the other mentioned standards. ČSN EN 60529 – Degrees of enclosure protection (coverage – IP code) defines the actual protection levels and specifies their requirements.

Norm ČSN 33 2000-7-722: Single-purpose devices and in special objects – the power supply of electric vehicles from the point of view of safety rejects protective measures using a barrier, a non-conductive environment, and non-grounded local connection, and electrical separation, as defined by the standard ČSN EN 61140 ed. 3. It is logical because these protective measures are in no way permissible for the likes and persons without electrical qualifications. In the case of the use of a protective measure by automatic disconnection from the source, it prescribes the use of a residual current device of at least type A as additional protection, which is used exclusively for the protection of this connection point. If the charging station is equipped with a socket or, as in our case, a vehicle connector, additional protective measures must be taken against leaking DC current, i.e. a type B circuit breaker must be used. If a circuit breaker A or F is used, it must also be retrofitted with a device that ensures disconnection of the power supply in case of DC leakage current (RDC - DD). The standard also stipulates the obligation to use one socket or connector for charging only one vehicle at a time.

The ČSN EN 61851-23 standard, in addition to defining terms and definitions, stipulates, among other things, the obligation of permanent continuity of the protective conductor. In isolated charging station systems, the continuity of the protective conductor must be continuously checked between the DC charging station and the electric vehicle. At voltages of 60 V and higher, the DC charging station must carry out an emergency disconnection if the protective conductor between the charging station and the electric vehicle is disconnected for more than 10 s. Furthermore, a test of the insulation condition before charging is prescribed. DC charging stations must verify the insulation resistance between the DC output circuit and the protective conductor on the vehicle chassis, including the charging station cover, before allowing the vehicle contactor to close. If the required value is not reached, charging must not be allowed. Another critical requirement for ensuring protection against electric shock applies to the condition after disconnection of the electric vehicle. One second after disconnection of the electric vehicle from the source, the voltage between the different accessible conductive parts or between each accessible conductive part and the protective conductor must be a maximum of 60 V DC and the available stored energy must be less than 20 J.

The ČSN EN ISO 17409 standard specifies electrical safety requirements and measures against overheating and fire protection. We also find the requirements for the design of the electrical plug and additional requirements for DC power transmission of electrical energy. In terms of protection against electric shock, it defines requirements for essential protection and requirements for a protective conductor.

Insulation monitor

The charging station must therefore be equipped, in addition to circuit breakers, protecting short circuits, overcurrent, and protection by automatic disconnection from the source, as well as a type B circuit breaker and, in addition, an insulation monitor. For our needs, the insulation condition monitor AGH420 with evaluation part isoEV425 from Bender was chosen, see **Fig. 7**.

Fig. 7. Insulation monitor

The ISOMETER insulation monitor monitors the insulation resistance of ungrounded AC/DC power circuits with a nominal voltage of up to 690 V AC and 1000 V DC. This type is intended precisely for the area of non-grounded DC charging stations so that it meets the IEC 61851-23 standard harmonized in the Czech Republic. A separate supply voltage source is required for the power supply, which enables disconnection of the measured part from the voltage. The maximum allowable leakage capacitance is 5 μF.

The current value of the measured insulation resistance is permanently displayed on the LCD display, and an alarm is indicated when it falls below the adjustable limit. There are two alarms. One warns of a drop in insulation resistance below a set level, and the other signals a critical drop in insulation resistance. Both types of alarms can be signaled using an auxiliary contact, and the information is transferred to the superior PLC. The insulation status monitor measures with a differential measurement method with a maximum response time of 10 seconds.

6 Tests

As part of testing the cooperation of individual elements of the charging station, it was necessary to test the possibilities of configuring power sources, reading the states of sources, and charging cables. The CAN communication bus was used for this purpose. At the lowest level, both options for establishing communication and data exchange between individual elements of the source and charging station were tested. The

first option is to use the lowest CAN communication layer for sending data and subsequent processing of all incoming messages. In this configuration, it is necessary to solve the filtering of incoming messages based on their CAN ID in software and then decipher their purpose and source. A control system was developed and tested for such a mode of communication with power sources. The system enables the setting of the source parameters (output voltage, charging current limitation, etc.), and the reading of the source states, such as the supplied current, temperature, etc., was also implemented and tested. Due to the relatively tricky or lengthy and complex evaluation of incoming messages, the use of the so-called proxy objects can be hardware configured for the given purposes. Specifying proxy objects means setting object parameters separately for outgoing and incoming messages. All program handling of communication consists only of working with the data buffer for the message. The main simplification is noticeable, especially when receiving messages. For each proxy object, a specific CAN ID can be set that the object will process, or the CAN ID range using a mask. This will make it possible to very elegantly separate messages from individual sources at the module firmware level, and there is no need to create message filters in software.

Both variants of implementing CAN bus communication have been thoroughly tested for communication with both one and a group of sources, including for reading operational data from the charging cable. Both separate communication with individual devices and under full load in a combination of all devices were tested.

7 Conclusion

In the next period, the plan is to test the communication between the electric vehicle and the charging station and to focus on mastering the implementation of the entire complex communication diagram, including the treatment of crisis situations. The charging station should be able to connect to the vehicle, start communicating, i.e. exchange identification data with each other, set its performance parameters according to the vehicle's requirements, and, after the necessary safety tests, start supplying electrical energy to the vehicle's batteries. Of course, the disconnection sequence, both standard, and emergency must also be mastered.

Acknowledgment

This work was supported by the Ministry of Education, Youth and Sports of the Czech Republic and the European Union (European Structural and Investment Funds – Operational Programme Research, Development and Education) in the frames of the project “Modular platform for autonomous chassis of specialized electric vehicles for freight and equipment transportation”, Reg. No. CZ.02.1.01/0.0/0.0/16_025/0007293

References

1. W.J. Sweeting, A.R. Hutchinson, S.D. Savage, Factors affecting electric vehicle energy consumption, Int. J. Sustain. Eng. 4 (3), (2011), 192–201.
2. K.K. Bhatia, W.T. Riddell, Identifying and modeling key trade-offs between hydrogen fuel cell and electric vehicles, Int. J. Sustain. Eng. 9 (3), (2016), 215–222.
3. G. Rajendran, C.A. Vaithilingam, N. Misron, K. Naidu, M.R. Ahmed, A comprehensive review on system architecture and international standards for electric vehicle charging stations, J Energy Storage, 42, (2021).
4. IEC Standards: Plugs, socket-outlets, vehicle connectors and vehicle inlets-conductive charging of electric vehicles -part 3: dimensional compatibility and interchangeability requirements for d.c. and a.c./d.c. pin and contact-tube vehicle couplers. Available: https://webstore.iec.ch/publication/6584.
5. J. Francfort, T. Garetson, D. Karner, S.D. Salisbury, J.G. Smart, Considerations for Corridor and Community DC Fast Charging Complex System Design, Idaho National Lab.(INL), Idaho Falls, ID (United States), 2017.
6. J.A. Sanguesa, V. Torres-Sanz, P. Garrido, F.J. Martinez, J.M. Marquez-Barja, A review on electric vehicles: technologies and challenges, Smart Cities 4 (1), (2021) 372–404.
7. C.H. Dharmakeerthi, N. Mithulananthan, T.K. Saha, Impact of electric vehicle fast charging on power system voltage stability, Int. J. Electron. Power Energy Syst. 57, (2014) 241–249.
8. New 800-Volt Fast Charging System, https://www.greencars.com/post/new-800-volt-fast-charging-systems (2022).
9. PhoenixContact. https://www.phoenixcontact.com, (2022).
10. UUGreenPower. https://www.uugpower.com/ur50060-w-b-product/, (2022).