Decoding Consumer Purchase Decisions in K-Beauty: The Interplay of Country of Origin and Brand Image in Emerging Markets

L. A. Wibowo[1], S.N. Fuadia[2], E. A. Primaskara[3], B. Widjajanta[4] and P. D. Dirgantari[5]

[12345]Universitas Pendidikan Indonesia, Bandung, Indonesia
liliadiwibowo@upi.edu

Abstract. This study investigates the descriptive profile and the impact of Country of Origin and Brand Image on Purchase Decision among Nature Republic's Instagram account followers. Employing a descriptive-verificative design with a quantitative approach, the research surveyed 358 respondents drawn from a population of 436,543 using simple random sampling. Data analysis was conducted through Structural Equation Modeling (SEM). Results reveal those respondents rate Country of Origin, Brand Image, and Purchase Decision in the high category. While Country of Origin demonstrates a positive but statistically insignificant effect on Purchase Decision, Brand Image exerts a positive and significant influence. Moreover, when considered jointly, both variables contribute significantly and positively to consumers' purchasing decisions. These findings suggest that, although Brand Image plays a more substantial role, Country of Origin and Brand Image can collectively drive purchase behaviours. Given the limited impact of Country of Origin, future research should consider incorporating additional dimensions or refined indicators to enhance the explanatory power of this variable.

Keywords: Country of origin, Brand image, and Purchase decision.

1 Introduction

In today's increasingly competitive business environment, firms must continuously generate innovative strategies to influence consumer purchase decisions [1]. As market dynamics evolve, competition intensifies at the brand level, where dominance is key to market control. Consequently, brand equity is now recognized as a strategic asset, with dominant brands holding a distinct advantage in driving market influence. When competition is minimal, a brand may serve merely as a product identifier; however, in highly competitive contexts, brands play a crucial role in shaping and sustaining consumers' purchase decisions [2]. Purchasing is often driven by a consumer's desire to buy, ultimately contributing to company revenue growth [3].

As consumers gain easier access to product information, their decision-making process continues to evolve [4]. Numerous studies have explored purchase decisions

© The Author(s) 2026
R. Hurriyati et al. (eds.), *Proceedings of the 10th Global Conference on Business, Management, and Entrepreneurship (GCBME 2025)*, Advances in Economics, Business and Management Research 407,
https://doi.org/10.2991/978-94-6239-819-1_76

across diverse sectors, including film [5], fashion [6], online marketplaces [7], smartphones [8], transportation [9], e-commerce [10], cosmetics [11], and the broader beauty industry [12–15]. These findings consistently underscore that purchase decision remains a critical and ongoing issue, warranting continued scholarly attention.

The beauty industry has attracted increasing interest due to its rapid growth and strong consumer demand [16]. In Indonesia, this demand signals a substantial market expansion opportunity [17]. Cosmetics, especially among women, continue to represent essential daily products and remain a promising business avenue within the modern beauty sector [18]. Industry reports project that the global cosmetics market — spanning fragrance, make-up, hair care, and skincare — will continue its steady expansion in the coming years [19], and this growth has intensified competition, particularly within the skincare segment [20]. The rapid rise of skincare products in Indonesia has also attracted growing interest from international brands seeking to enter the local market [21].

Among these international entrants, South Korean skincare brands have consistently been favored by Indonesian consumers in recent years. This preference is largely driven by the widespread popularity of South Korean culture in Indonesia, which has positioned the country as a trendsetter in the skincare industry [22].

Nature Republic, a South Korean skincare brand operating in the Indonesian market, exemplifies the competitive pressures faced by international entrants in this sector. As competition among skincare brands intensifies, sustaining market position and consumer purchase decisions becomes an increasingly pressing managerial concern [20].

More broadly, weak purchase decisions can negatively affect a firm's sales and financial performance, whereas strong consumer decisions tend to drive higher sales and enhance overall company performance [23,24]. This underscores the importance of examining the factors that shape consumer purchase decisions toward internationally positioned skincare brands such as Nature Republic.

Previous research identifies several factors influencing purchase decisions, including green marketing [25], celebrity endorsers [26], and brand trust together with electronic word of mouth [13]. Country of origin has similarly been shown to shape purchase decisions across various product categories [27–30], and prior work suggests that country-of-origin perceptions and brand image are closely interrelated constructs that jointly influence how consumers evaluate products.

Firms must implement strategies that foster brand loyalty and trust to sustain long-term customer relationships and attract new buyers. This study focuses on two strategic variables: country of origin and brand image. Country of origin refers to consumers' mental associations and perceived trust linked to a product's nation of origin [31]. These perceptions often shape purchase decisions, as consumers tend to hold specific biases toward certain countries [32], which can drive actual buying behavior [33].

Brand image encompasses the perceptions formed in consumers' minds when recalling a brand [34]. It plays a critical role in marketing by shaping consumer trust and influencing product choice. A strong brand image enables consumers to recognize products, evaluate quality, reduce perceived risk, and gain satisfaction — ultimately guiding purchase decisions [2].

Nature Republic seeks to strengthen its country-of-origin appeal by cultivating positive country beliefs, aiming to build consumer trust in South Korea as its place of origin, while also positioning itself around environmentally responsible values as part of its broader country-of-origin and brand-image strategy.

Simultaneously, the brand enhances its image by emphasizing eco-friendly values and green product attributes. By promoting cosmetics made from natural, environmentally safe ingredients, Nature Republic projects a responsible and ethical brand personality. This approach supports consumer safety and resonates with environmentally conscious values, thereby increasing interest in green cosmetics [35].

To assess purchase decisions within the beauty industry, particularly for Nature Republic consumers, this study applies dimensions such as product choice, brand choice, store choice, purchase timing, purchase quantity, and purchase amount.

2 Methods

This study examines the influence of Country of Origin and Brand Image on Purchase Decision. The independent variables include Country of Origin, measured through the dimensions of country belief and people affect, and Brand Image, assessed through corporate image, user image, product image, mystery, and sensuality. The dependent variable, Purchase Decision, is evaluated using six dimensions: product choice, brand choice, store choice, purchase timing, purchase quantity, and purchase amount.

The population comprises Nature Republic's Instagram followers, totaling 436,543 users. Based on the Isaac & Michael sampling formula, a minimum of 358 respondents was determined for the sample. Structural Equation Modeling (SEM) was employed for the verification analysis.

3 Results And Discussions

To explore consumer perceptions of Country of Origin, Brand Image, and Purchase Decision, 358 respondents were surveyed. The data were collected through questionnaires distributed to Nature Republic Indonesia's official Instagram account followers.

a. Country of Origin

Figure 1 presents the responses of Nature Republic Indonesia's Instagram followers regarding the Country of Origin.

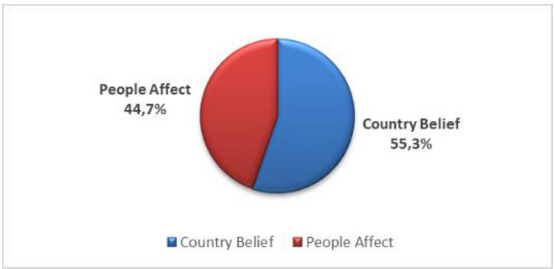

Fig. 1. Responses of Nature Republic Indonesia Instagram Followers to Country of Origin

As shown in Figure 1, responses from Nature Republic Indonesia's Instagram followers regarding Country of Origin indicate that the country belief dimension contributes the most, with a score of 13,627, or 55.3% of the total score of 24,629. This reflects a high level of consumer trust in South Korea as the country of origin for Nature Republic, particularly in areas such as innovation, education, technology, reputation, design, and reliability. These findings are broadly consistent with South Korea's internationally recognized strengths in innovation, education, technology, and reputation, which have long underpinned its national branding.

The lowest-scoring dimension is people affect, with a score of 11,002, or 44.7%, suggesting that consumers place less emphasis on the quality and creativity of South Korean human resources. Nevertheless, enhancing the quality of human capital remains essential, as it plays a critical role in driving organizational performance and long-term competitiveness.

b. Brand Image

. In this study, the overall Brand Image variable (X2) comprises five dimensions: corporate image, user image, product image, mystery, and sensuality. The contribution of each dimension is reflected in the score values derived from the recapitulation of responses related to the Brand Image variable. This recapitulation is based on questionnaire data collected from 358 respondents, all of Nature Republic Indonesia's official Instagram account followers, as illustrated in Figure 2.

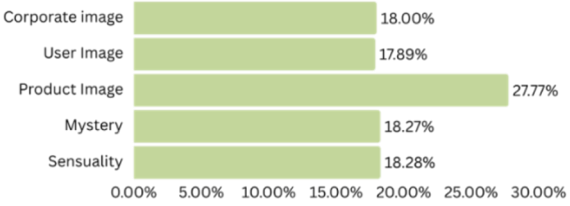

Fig. 2. Responses of Nature Republic Followers in Indonesia to Brand Image

Figure 2 reveals that the product image dimension contributes the most to Nature Republic's overall brand image, with a score of 6,394, accounting for 27.77% of the total score of 23,025. This suggests that consumers value Nature Republic's product

quality, benefits, and uniqueness. These findings support the view that products with a strong, positive image are more likely to be chosen by consumers. In the beauty industry, perceptions of product image tend to be subjective, often shaped by personal preferences, lifestyle, and prevailing trends, making it challenging to establish consistency across all market segments.

The lowest-contributing dimension is mystery, related to packaging, which received a score of 4,207, or 17.89%. This indicates the need to enhance packaging appeal. However, today's consumers increasingly prioritize ingredient quality and functional benefits over external appearance.

c. Purchase Decision

In this study, the Purchase Decision variable (Y) consists of six dimensions: product choice, brand choice, store choice, purchase quantity, purchase timing, and payment method. The contribution of each dimension is reflected in the score values obtained from the recapitulation of questionnaire responses. These responses were collected from 358 followers of Nature Republic Indonesia's official Instagram account, as illustrated in Figure 3.



Fig. 3. Responses of Nature Republic Instagram Followers in Indonesia to Purchase Decisions

As illustrated in Figure 3, responses from Nature Republic Indonesia's Instagram followers indicate that the payment method dimension ranks highest, with a score of 4,558, accounting for 18.46% of the total score of 24,688. This suggests that followers value the convenience and variety of Nature Republic's payment options. This finding aligns with the notion that flexible and accessible payment methods enhance customer satisfaction and purchasing decisions by streamlining the transaction process — an essential factor in retail environments where ease of transaction is paramount.

Conversely, the purchase quantity dimension received the lowest contribution, scoring 2,167, or 8.78%. This implies that Nature Republic's followers are selective regarding the quantity of products they purchase, often carefully considering the number of items per transaction. This result is consistent with the general observation that price sensitivity, brand loyalty, and specific purchasing behavior significantly influence purchase quantity decisions, even where product interest is present.

To examine the extent to which the dimensions of country of origin and brand image influence purchase decisions among consumers who follow Nature Republic on Instagram in Indonesia, the study employed Structural Equation Modeling (SEM). The analysis was conducted using SPSS Amos 23.0 for Windows, which enabled the

evaluation of the structural relationships between constructs and the estimation of the overall model fit.

The empirical findings reveal that the critical ratio (C.R.) for the combined effect of country of origin and brand image on purchase decision is 7.341, exceeding the critical t-value of 1.96. This indicates the rejection of the null hypothesis, confirming both variables' positive and significant influence on purchase decisions. The model's probability value is marked with (***), indicating $p < 0.05$, further supporting the statistical significance of this relationship. Therefore, the hypothesis that country of origin and brand image affect purchase decisions is accepted.

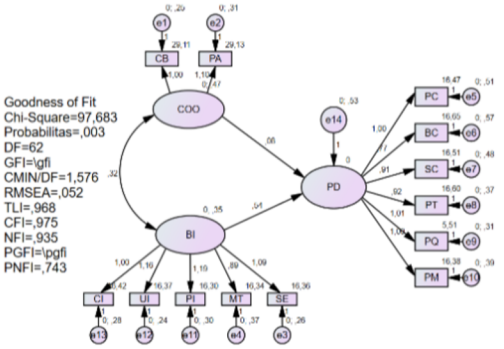

Fig. 4. Hypothesis Diagram

These results suggest that leveraging country of origin and brand image constitutes an effective corporate strategy to enhance brand equity, thereby building consumer trust and potentially increasing purchase decisions.

4 Conclusion

Based on the descriptive, verificative, and SEM analyses, this study concludes that country of origin, brand image, and purchase decisions among Nature Republic Indonesia's Instagram followers are generally perceived favorably. Country-of-origin perceptions are primarily shaped by country beliefs, while brand image is most strongly reflected in product image, and purchase decisions are most evident in purchase amount. The structural analysis further demonstrates that country of origin has a positive but statistically insignificant effect on purchase decisions, suggesting that favorable perceptions of South Korea as the brand's country of origin alone are insufficient to significantly drive consumers' purchasing decisions. In contrast, brand image has a positive and significant effect on purchase decisions, indicating that stronger perceptions of the brand, particularly its product-related attributes, are associated with greater consumer willingness to purchase. Furthermore, country of origin and brand image jointly exert a positive and significant influence on purchase

decisions, highlighting the importance of integrating favorable country-of-origin associations with a strong and distinctive brand image. Overall, the findings suggest that for Korean skincare brands such as Nature Republic, strengthening brand image may be more consequential for stimulating consumer purchasing decisions than relying solely on country-of-origin perceptions, while the combined management of both factors can further enhance consumer response in the Indonesian market.

References

1. Rois EL. Pengaruh Religiusitas, Norma Subyektif dan Perceived Behavioral Control terhadap Niat Membeli Produk Makanan Ringan Berlabel Halal (Studi pada Mahasiswa Muslim Fakultas Ekonomi Universitas Negeri Yogyakarta). Undergraduate thesis, Universitas Negeri Yogyakarta (2016)
2. Kotler P, Keller KL. Marketing Management. 15th edn. Pearson, Boston (2016)
3. Nguyen PV, Le H, Tran KT. Effects of country of origin, foreign product knowledge and product features on customer purchase intention of imported powder milk. Int J Bus Innov Res. https://doi.org/10.1504/IJBIR.2019.100071 (2019)
4. Djafarova E, Rushworth C. Exploring the credibility of online celebrities' Instagram profiles in influencing the purchase decisions of young female users. Comput Hum Behav. 68:1–7 (2017). https://doi.org/10.1016/j.chb.2016.11.009
5. Adi Cakranegara P, Budiasih Y, Tannady H, Totok Suyoto Y. Analysis of the effect of perceived value and brand image on Netflix service purchase decisions. Manag Stud Entrep J. 3(5):3238–3247 (2022)
6. Setiawati E, Wiwoho G. Pengaruh social media marketing dan product quality terhadap purchase decision dengan purchase intention sebagai intervening pada produk Jims Honey. J Ilm Mahasiswa Manaj Bisnis Akunt. 3:407–424 (2021). https://doi.org/10.32639/jimmba.v3i3.843
7. Sari AP, Rahmidani R. Pengaruh e-word of mouth dan e-trust terhadap e-purchase decision mahasiswa Universitas Negeri Padang pada marketplace Lazada. 2:666–677 (2019)
8. Putra LD, Susanto EH. Pengaruh marketing mix dan perceived quality terhadap purchase decision smartphone VIVO. pp 77–82 (2019)
9. Rizkia R, Oktafani F. The effect of storytelling marketing on purchasing decisions through brand equity as intervening variable on Gojek in Jakarta. Int J Manag Entrep Soc Sci Humanit. 3(1):48–55 (2020). https://doi.org/10.31098/ijmesh.v3i1.190
10. Ikawati K, Militina T, Achmad GN. The effect of celebrity endorsers and advertising attractiveness on brand image and purchase decisions for Tokopedia application users in Samarinda. Bus Account Res. 5(2):461–471 (2021)
11. Maria P, Pandoyo. Pengaruh atribut halal terhadap keputusan pembelian kosmetik Wardah (survey pada karyawan PT Barclay Products Jakarta). J Ekon Manaj Bisnis Sos. 1(1):40–47 (2020)
12. Afriani S. The influence of brand image, quality product, and brand trust on consumer purchase decisions for Camille Beauty products in Batam City. 5(1):226–232 (2024)
13. Annisa FN, H.M H, Bagus H. Pengaruh brand trust terhadap eWOM referral melalui purchase decision (pada industri salon). pp 199–211 (2022)

14. Thakor M, Prajapati SG. Factors that encourage impulse purchase and impact of visual merchandising on the purchase decision of women for beauty products in Gujarat. Int J Res Commer Manag. 2 (2012)
15. Yasin R, Java E, Nuruni K Wardhani II, Reiga Ariescy IR. Influence of gender-neutral marketing advertisement campaign and brand image on the purchasing decisions of Dear Me Beauty cosmetic products. Int J Innov Sci Res Technol. 9(1):32–39 (2024)
16. Salsabila NA, Mayangsari L. Pembelian kosmetik natural online dari aspek eksternal dan internal. J Wacana Ekon (2020)
17. Septiyadi AL, Made I, Dirgantara B. Pengaruh atribut kemasan (packaging) terhadap minat beli konsumen pada produk kosmetik Emina. Diponegoro J Manag. 10(4):1–14 (2021)
18. Hakim AR, Daviya M, Fauzi N. Industri Kosmetik dan Manfaat Bagi Konsumen Kosmetik di Indonesia. Padang State University (2017)
19. McKinsey and Company. The beauty market in 2023: a special State of Fashion report (2023)
20. [20] Sudirjo F, Dwijayani H, Bilgies AF, Risdwiyanto A, Rahmi N. Analysis of the influence of product quality, brand image and country of origin on purchase decision of Xiaomi mobile phone products. JEMSI. 9(5):1932–1936 (2023). https://doi.org/10.35870/jemsi.v9i5.1485
21. Siti A, Anggriany F. Analisis preferensi konsumen terhadap produk perawatan diri (skincare) lokal yang mempengaruhi customer loyalty. J Ekon Bisnis. 11(3):726–740 (2022)
22. Index ZB. ZAP Beauty Index and MarkPlus. ZAP Clinic. pp 1–36 (2020)
23. Xian GL, et al. Pengaruh Citra Merek, Kualitas Produk, Harga, dan Promosi terhadap Keputusan Pembelian Kartu Perdana Telkomflexi (Studi Kasus pada Konsumen Telkomflexi di Kecamatan Kota Kudus Kabupaten Kudus). J Ilmu Adm Bisnis. pp 203–213 (2011)
24. Majid M, Ramli MF, Badyalina B, Roslan A, Che Mohd Hashim AJ, Mohd Nadzri WN. Consumer purchase decision in the Malaysian retail market: a study of RM2 stores. Int J Manag Stud. 30 (2023). https://doi.org/10.32890/ijms2023.30.1.4
25. Karlina G, Setyorini R. Pengaruh green marketing terhadap keputusan pembelian dengan brand image sebagai mediator (studi pada Innisfree Bandung). Manag Account Expose. 1(2):56–65 (2018)
26. Yunita P, Indriyatni L. Pengaruh brand image, daya tarik iklan, dan celebrity endorser terhadap keputusan pembelian MS Glow (studi kasus pada pelanggan MS Glow Kota Semarang). Pros Semin Nas UNIMUS. 5:279–287 (2022)
27. Javed A, Hasnu SAF. Impact of country-of-origin on product purchase decision. J Mark Consum Res. 1:31–51 (2018)
28. Kausuhe JN, Worang FG, Gunawan EM. The influence of brand image and country of origin on purchase decision of Oppo smartphone in Manado. Jurnal EMBA. 9(1):207–215 (2021)
29. Nayumi S, Sitinjak TJR. Pengaruh Country of Origin Image, Brand Image, dan Kualitas Produk terhadap Keputusan Pembelian Produk Innisfree di Mall Kelapa Gading Jakarta Utara. J Manaj. 9(2):136–146 (2020). https://doi.org/10.46806/jm.v9i2.665
30. Rahayu DS, Sutedjo B. Pengaruh Country of Origin, Persepsi Harga, dan Brand Ambassador terhadap Keputusan Pembelian (Studi pada Konsumen Produk Kosmetik YOU). SEIKO J Manag Bus. 5(1):2022–2182 (2022). https://doi.org/10.37531/sejaman.v5i1.1904
31. Kotler P, Caslione JA. Chaotics. Eur Bus Rev. (2009). https://doi.org/10.1108/ebr.1998.05498bab.003
32. Hananto K. Pengaruh Brand Image dan Country of Origin terhadap Minat Pembelian iPhone. Parsimonia. 2(2):13–22 (2015)

33. Hien NN, Phuong NN, van Tran T, Thang LD. The effect of country-of-origin image on purchase intention: the mediating role of brand image and brand evaluation. Manag Sci Lett. 10(6):1205–1212 (2020). https://doi.org/10.5267/j.msl.2019.11.038
34. Kotler P, Keller K, Chernev A. Marketing Management. Pearson (2022)
35. Amin AM, Yanti RF. Pengaruh Brand Ambassador, E-WOM, Gaya Hidup, Country of Origin dan Motivasi terhadap Keputusan Pembelian Produk Skincare Korea Nature Republic. INVEST J Inov Bisnis Akunt. 2(1):1–14 (2021). https://doi.org/10.55583/invest.v2i1.111

Open Access This chapter is licensed under the terms of the Creative Commons Attribution-NonCommercial 4.0 International License (http://creativecommons.org/licenses/by-nc/4.0/), which permits any noncommercial use, sharing, adaptation, distribution and reproduction in any medium or format, as long as you give appropriate credit to the original author(s) and the source, provide a link to the Creative Commons license and indicate if changes were made.

The images or other third party material in this chapter are included in the chapter's Creative Commons license, unless indicated otherwise in a credit line to the material. If material is not included in the chapter's Creative Commons license and your intended use is not permitted by statutory regulation or exceeds the permitted use, you will need to obtain permission directly from the copyright holder.

