Design of Mining Personnel Positioning System Based on Wireless Sensor Network

Liu Zhong Fu
College of Information & Communication Engineering
Dalian Nationalities University
Liaoning Dalian,China
lzhongfu@dlnu.edu.cn

Wang Xia
Academic Service Section
Dalian Sport School
Liaoning Dalian, China)
1051018029@qq.com

Han GuiYing
College of Information & Communication Engineering
Dalian Nationalities University
Liaoning Dalian,China
guiyinghan@126.com

Abstract—Underground mining is hazardous due to variable conditions in production so accidents occur frequently. The present monitoring system can no longer ensure its safety. Applying Wireless Sensor Network as monitoring system can improve monitoring efficiency and prevent mining accidents. Based on research of Wireless Sensor Network technology, this article introduces the design of mining personnel orientation system, which uses zigbee aggregation nodes to locate underground workers wearing RFID signal transmitters. Information collected by the wireless transceiver will be sent to the ground surveillance system via Wireless sensor network. In terms of the underground environments, this article presents an improved APIT positioning algorithm, which provides the accuracy of location at low cost. The system provides a practical method of evacuation scheduling in underground mining accidents, which aims to reduce accidents and protect the workers.The system is of high practicability for it can collect the locations of mining workers instantly, and effectively track the location.

Keywords- Wireless Sensor Network; personnel orientation; zigbee; sensor node; positioning algorithm

I. INTRODUCTION

In China, there are many safety accidents in underground mining. It has been hard for the ground personnel to know the dynamic distribution of the underground workers, which results in the lack of information during rescues which is neither efficient nor successful. It is significant to monitor the producing environment and to know the exact number and location of the workers. Positioning for underground workers to instantly know their number and location makes a difference which also provides reliable information for secure production and accidental rescue.

At present, advanced positioning monitoring system is mostly wired, which is hard to realize cabling, flexibility and tracking. Therefore, wireless monitoring system based on wireless sensor network has become the focus of current researches and application. However, owing to the special environment for underground mining, the positioning technology based on wireless sensor network applied underground is slightly different from the one applied on the ground, which mainly lies on the stability of the system and the adaptability of the positioning algorithm. Wherefore, research breakthrough of the specific problems above is now the focus of applying wireless sensor network.

Status quo and trend of mining personnel positioning system:

In China, there are many companies engaged in developing mining personnel positioning monitoring system. These systems are basically applied with RFID technology, an attendance recording system actually rather than a real personnel positioning and rescue system. RFID tracking and positioning system terminals that existed national or foreign companies applying can be sorted out as passive and active. Communication technology between the base stations of these two kinds of RFID technology for tracking and positioning is usually wired, which has low efficiency with high cost in long-distance transmission and it is inconvenient to install.

Few companies in China develop the ZigBee-based wireless sensor network positioning and rescue system. Thanks to the special environments underground, it is still being tested in the lab rather than a real product.

II. WIRELESS SENSOR NETWORK

Wireless Sensor Network is built of a large quantity of set or moving sensor nodes forming a wireless network in self-organized or multi-hop way. Interaction between wireless nodes will collect, transmit and aggregate the information of the sensors or position in covering area[1].

Wireless Sensor Network is built of a large number of nodes of smart sensors densely distributed among the monitored area, which can automatically complete the monitoring task according to the environments. The smart self-organized sensor network is flexible, stable, size-scalable, adaptive, low-consuming, and autonomous, with a high value in advanced fields like military, medical and aerospace[2,3].

Features of wireless sensor network:

(1) Stable and interference-resistant

Safe. ZigBee technology is available for checking statistics integrity and authentication. Using the encryption algorithm AEs-128/64/32, each application can make sure the safety properties flexibly, providing a more effective assurance[4].

(2) Fast and distant

ZigBee has two physical layers: 2.4 GHz and 868~915 MHz; their speed are 250 kb/s and 20-40 kb/s, reaching the distance of 30-70m.With expanded signal, the distance can reach over 100m.

(3) Large network capacity

One ZigBee network can contain 254 sub-devices and 1 primary device. Multiple ZigBee network can connect with each other. Additionally, ZigBee node is handy and portable with small volume. Its low cost and consumption make it suitable for underground mining wireless positioning[5].

Fig .1 is the Process of wireless sensor network.

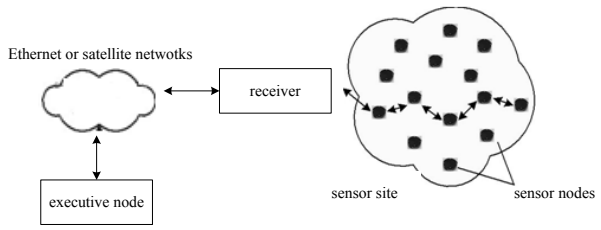

Figure 1. wireless sensor network system

III. GENERAL DESIGN OF THE SYSTEM

The mining personnel positioning system uses ZigBee wireless network technology, with aggregation nodes (ZigBee readers) installed in key spots such as wellheads, underground forks of main paths, and entrances[6]. Its number and density depend on the procedures of accuracy of personnel positioning. Based on the actual requirement of the sites, install some nodes in proper places in the trenches. The network module installed is one ZigBee communication network, and every network node is one positioning base station. The mobile sensor nodes are the RFID positioning labels inserted in the workers' helmets and belts which will launch existed information, radio frequency signals at a certain band regularly. Network aggregation nodes can automatically read the information and signal of the moving objects to get its location. Aggregation nodes are connected by the existed communication cables and the information will be sent to the terminal management computer via switches. It realizes all the functions of personnel positioning system by the underground mining personnel positioning software. Fig .2 is the framework of mining personnel positioning system.

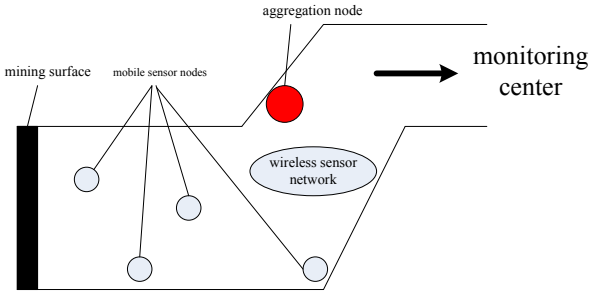

Figure 2. the block diagram of mining personnel positioning system

IV. HARDWARE CIRCUIT DESIGN OF SYSTEM

A. Low-consuming design of mobile sensor nodes

Consumption is a key factor in positioning technology. The consumption of sensor nodes is related to the hardware design, the computer mode and sensors' sample cycle and accuracy.

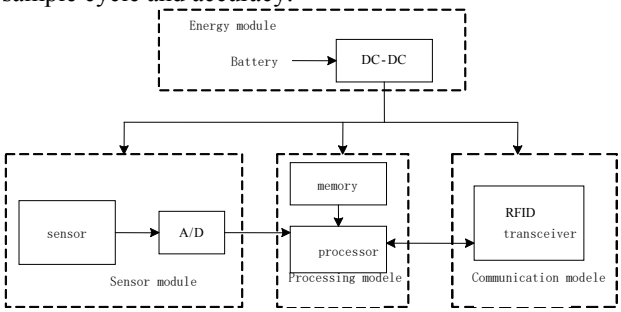

Figure 3. block diagram of the hardware for low-consuming sensor nodes

In order to reduce consumption and prolong its usage, sensor nodes use single-chip LPC932 as low-consumptive microcontrollers which can be applied to high-integrated and low-cost occasions. As for RFID transceivers, they are existed RF data transceiver chips in place of high-frequency circuits of discrete components.

Multi-channel monolithic transceiver chip nRF905 from Nordjc is applied as radiofrequency. It contains GFSK modulation and demodulation techniques, with working voltage 1.9-3.6V at 433, 868/915MHz these three ISM channels. NRF905 consists of frequency synthesizer, receiver demodulator, amplifier, crystal oscillator and modulator with a low consumptive working mode Shock Burst, which can automatically work for preamble and CRC. The on-chip hardware can also automatically complete Manchester encoding and decoding. It is convenient that SPI interface can communicate with the MCU. As the RF transmitter chip, its nature to low consumption performs prominently. When outputting power at -10dBm, the current is only 1lmA. When receiving power, the current is 12.5 InA. When transmitting data, nRF905 is not working instantly, that after sender sends out the data, the receiver receives the data and stores it in the chip memory temporarily so that

the external MCU can take it from the chip when necessary. The maximum amount of one output of nRD905 is 32 B. The antenna interface is differential antenna, corresponding to the low-cost PCB antenna.

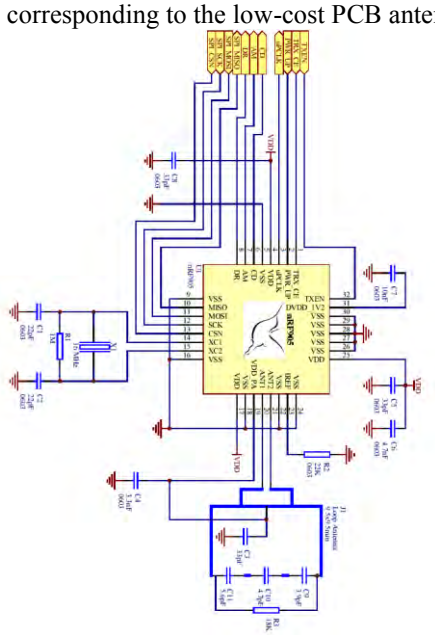

Figure 4. NRF905 circuit schematics

B. *Design of aggregation nodes*

Aggregation nodes use full functional ZigBee devices. Diagram 4 is its circuit schematics.

Aggregation nodes module is CC2430, as a coordinator in the system. The functions are:

establish network and wireless transceiver;

1) calculate the checksum

2) forward computer data and configure reference nodes and positioning nodes.

3) communicate with the computer via serial ports

4) Forward computer data and configure the coordinates of positioning nodes.

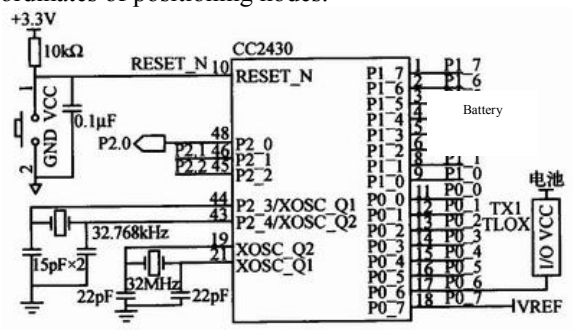

Figure 5. hardware circuit of CC2430

CC2430 is a low-consumptive wireless RF chip, which has a strong Robust RF, a programmable microcontroller, flash memory, analog/digital converter (ADC), compatible with IEEE 802.15.4 and ZigBee software. It consists a high-performance DSSS RF transceiver core at 2.4GHz and an industrial grade enhanced 8051 microcontroller. With the ZigBee technology with this advanced chip and CAN bus network, the mining personnel can be positioned and the gas can be monitored[7].

CC2430 chip is produced in 0．18 m CMOS technology, with its working voltage is 27 mA. When receiving and transmitting, the working voltage is less than 27 mA or 25 mA. The shift from CC2430's sleep mode to active mode only takes an instant, which especially fits the long-term battery. Fig .5 is the hardware circuit.

V. SOFTWARES OF THE SYSTEM AND THE DESIGN OF POSITIONING ALGORITHM

The present wireless positioning technology has two methods: ranging-based and free-ranging. Ranging-based method contains 2 steps: measuring the distance and direction between nodes and then calculating the position. Free-ranging method does not need to estimate the distance and angles. It locates the positions based on information on node network topology. The positioning algorithm of free-ranging method is presented in reference [8], based on DV-hop algorithm and various researches of the improved methods. Reference [9] is the tracking algorithm of Linear Constrained Convex Programming based on Convex Programming. Reference [10] presents the algorithm based on multidimensional scaling. However, this algorithm is centralized-located, not suitable for the self-organized structure which has no center. In addition, this algorithm involves a mass of complicated calculation. Free-ranging positioning algorithm has advantages in its cost and consumption. But the density of nodes has great impact on its accuracy.

As reference [11] indicates, ranging-based technology is a positioning algorithm based on time difference of arrival (TDOA), which estimates the distance by measuring nodes' time differences of arrival via electromagnetic wave and ultrasound. Ultrasound can only transmit limited distance, and it is easily interfered by receiving angles, temperature, and obstacles. So it is not practical to use. Reference [12] presents AOA based on arriving angles, which requires external antenna array and RF signal should be sight transmitted. Ranging-based positioning algorithm needs the information about the distance and angles of the nodes which are actually measured. It is of high accuracy while high demanded of hardware, which also has large consumption and is easily affected.

TAB.1 is the analysis of various positioning algorithm .

In order to reduce the cost of node positioning, the system applies new algorithm which allows data packet through the nodes carry hop-count of its location and distance. Nodes then calculate and reassess its position according to the latest-received data packet. If the two calculated results are very different, then it refers to changed position of the nodes, in which way we can get the new position of them.

At the same time, positioning algorithm APIT in the sensor nodes can be applied to mobile target positioning. Any three nodes which can communicate with each other locate the position of a moving target by exchanging

information of whether the object is getting closer or further too see whether the object is in the triangle formed by the three nodes as apexes. Lastly by the overlapping area of multiple triangles alike, they manage to locate the position of certain object.

TABLEI. analysis of various positioning algorithm

algorithm	centroid method	DV-Hop	Amorphous
Positioning accuracy	medium	good	good
Node density	>0	>8	>8
Anchor node density	>10	>8	>8
Irregularity	good	good	medium
Positioning error of anchor node	good	good	medium
Communication consumption	lowest	highest	high

Positioning process: first, the node which is to induce the object becomes the root node by competition (considering the moving object's distance and left energy). Then other nodes join in, which report its own position and information on whether the object is closer or further. The root node will calculate the "triangle of the moving object". Additionally, we also think about the replacement of the root nodes, which is that when the hop-count between the moving object and the root node is too large, the original root node will be replaced by the new one.

Fig .6 reveals the flows of the personnel positioning system.

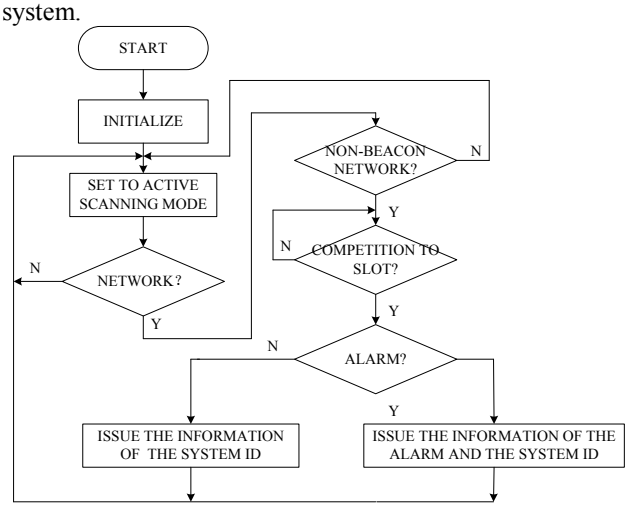

Figure 6. flow diagram of personnel positioning system

VI. CONCLUSION

This article presents a design of personnel positioning system based on wireless sensor network, where mobile sensor nodes and aggregation nodes is being designed and the positioning algorithm of the system is being analyzed. The system provides a practical method of evacuation scheduling in underground mining accidents, which aims to reduce accidents and protect the workers. At the same time, the highly modular design allows the system to modify and extend. Wireless transceiver module can be adjusted flexibly based on different demands which also realize the flexibility of personnel positioning accuracy.

REFERENCES

[1] Dargie, W. and P.C.Fundamentals of wireless sensor networks : theory and practice. John Wiley and Sons, 2010 : 168-183,191-192.

[2] Kuntz,R, Gallais, A, Noel, T et a1. Medium Access Control Facing the Reality of WSN Deployments . Computer Communication Review,2009, 39(3) : 22-27.

[3] H Yousefi, MH Yeganeh, A Movaghar. Long lifetime routing in unreliable wireless sensor networks. Proceedings of the 2010 IEEE International Conference on Networking, Sensing and Control (ICNSC'11), Apr 10-13, 2011, Delft, Netherlands, IEEE, Piscataway, NJ, USA (2011), pp. 57–462.

[4] H Yousefi, K Mizaniam, AH Jahangir. Modeling and evaluating the reliability of cluster based wireless sensor networks. Proceedings of the 24th IEEE International Conference on Advanced Information Networking and Applications (AINA'10), Apr 20-23, 2010, Perth, Australia, IEEE, Piscataway, NJ, USA (2010), pp. 827-834.

[5] SC Choi, SL Gong, JW Lee. An average velocity-based routing protocol with low end-to-end delay for wireless sensor Networks. IEEE Communications Letters, 13 (8) (2009), pp. 621–623.

[6] M. Cardei and J. Wu, "Coverage in wireless sensor networks," in Handbook of Sensor Networks: Compact Wireless and Wired Sensing Systems, M. Ilyas and I. Mahgoub, Eds. Boca Raton, FL: CRC Press, 2004, pp. 432-446.

[7] Xiao-Min Hu, Jun Zhang, Yan Yu, Henry Shu-Hung Chung, "Hybrid Genetic Algorithm Using a Forward Encoding Scheme for Lifetime Maximization of Wireless Sensor Networks", IEEE transactions on evolutionary computation, vol. 14, no.5, October 2010.

[8] R. Vishnubhotla, P.S. Rao, A. Ladha, S. Kadiyala, A. Narmada, B. Ronanki, S. Illapakurthi, ZigBee based multi-level parking vacancy monitoring system, in: 2010 IEEE International Conference on Electro/Information Technology, May 2010, pp. 1-[9] O. Dalmau and M. Rivera "A general Bayesian Markov random field model for probabilistic image segmentation", Proc. IWCIA, pp.149 -161 2009.

[9] H.Chen,D.Ping,Y.Xu,X.Li. A Novel Localization Scheme Based on BSS Data for Wireless Sensor Networks[M].Advanced Web and Network Technologies,and Applications,LNCS,2006.

[10] J. McEllroy, J. F. Raquet, and M. A. Temple, "Opportunistic navigation: Finding your way with AM signals of opportunity," GPS World, pp. 44-49, July 2007.

[11] A. Ferreol, J. Bosse, and P. Larzabal, "A low-cost AOA-TDOA approach for blind geolocation in multi-paths context," Proc. of 18th European Signal Processing Conference (EUSIPCO-2010), pp. 686-690, Denmark, Aug. 2010.

[12] WANG Dong, ZHANG Jinrong, et al. Building Wireless Sensor Networks by ZigBee Technology [J]. Journal of Chongqing University(Natural Science Edition), 2006, 29 (8): 95-97.