Three-dimensional Finite Element Simulation Analysis for Bridge-type Inverted Siphon Structure

Ji Dongyu
Hunan Urban Construction College
Xiangtan, China
hnjdy@126.com

Song Chuncao
North China University of Water Resources and Electric Power
Zhengzhou, China
285893543@qq.com

Abstract—Bridge-type inverted siphon is located at Yangdong reservoir in the Zixing county, Hunan province, its controlled basin area is 31000 mu. Inverted siphon pipe is single round pipe, inner diameter is 1.0 m, wall thickness is 0.21 m, adopts reinforced concrete structure. This paper uses universal finite element software to analyse bridge-type inverted siphon, and research stress and deformation distribution of inverted siphon during construction and operation period. Research results further verify rationality and safety of design scheme, can reliable reference basis for design and construction of inverted siphon structure. Analysis results show that, stress of bridge type inverted siphon is small, through reinforcement can meet design needs and strength requirement. Displacement of inverted siphon structure is small, can satisfy stiffness requirement. Analysis shows that inverted siphon structure is reasonable, safe and reliable.

Keywords- Bridge-type inverted siphon; Design scheme; Finite element method; Stress distribution; Simulation analysis.

I. INTRODUCTION

Bridge-type inverted siphon is located at Yangdong reservoir in the Zixing county, Hunan province, its controlled basin area is 31000 mu. Its design discharge is 3.0 m^3/s, velocity is 3.82 m/s, minimum head is 45.5 m, design head is 51.31 m, head loss is 5.0 m, total length is 405 m[1]. Inverted siphon pipe is single round pipe, inner diameter is 1.0 m, wall thickness is 0.21 m, adopts reinforced concrete structure, concrete strength grade is C25, reinforced strength grade is II. Core pipe of bridge-type inverted siphon adopts steel wire mesh cement precast thin-wall pipe, external pipe adopts prestressed screw steel hoop, protective layer adopts steel wire mesh and cement, length of each pipe is 3 m[2].

II. STRUCTURE STRESS CALCULATION

A Model Parameters.

Concrete strength grade of inverted siphon pipe is C25, elastic modulus of concrete is 28 GPa[3], poisson's ratio of concrete is 0.167, bulk density is 24 kN/m^3. Concrete strength grade of bent is C15, elastic modulus of concrete is 22 GPa, poisson's ratio of concrete is 0.167[4], bulk density is 24 kN/m^3.

B Element Selection and Model Size.

Concrete arch dam and the bedrock structure are simulated by using eight node isoparametric brick element, the element with 8 nodes is used in the 3 d model of the entity structure[5-6]. Reinforced concrete pipe adopts integral reinforcement model, through define reinforcement ratio in different direction to simulate reinforcement effect[7-8]. Total length of inverted siphon is 405 m, total length of bridge-type inverted siphon is 120 m, 8 spans, each span is 15 m. When establishing structural finite element calculation model for inverted siphon, simulates pipe section of inverted siphon across the river mainly, head of this pipe section is maximum[9]. Calculation model of inverted siphon structure shows in the Fig .1.

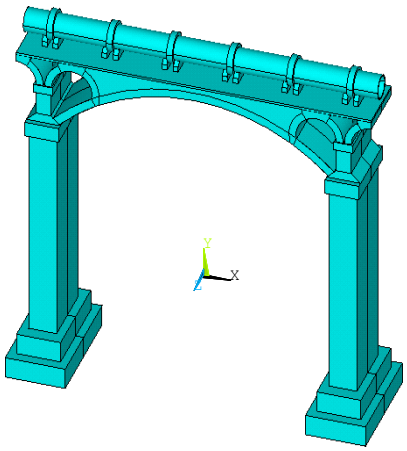

Figure 1. Calculation model of inverted siphon structure

C Calculation Cases.

In the stress analysis of bridge-type inverted siphon project, mainly consider the following 3 kinds of calculation cases[10]: case 1, dead weight (construction case); case 2, dead weight and minimum head (operation case); case 3, dead weight and design head (operation case).

III. STRUCTURE ANALYSIS

A Stress Analysis.

To calculate stress distribution results under different cases, the first principal stress nephogram and longitudinal stress nephogram of inverted siphon under different cases show in from Fig .2 to Fig .7.

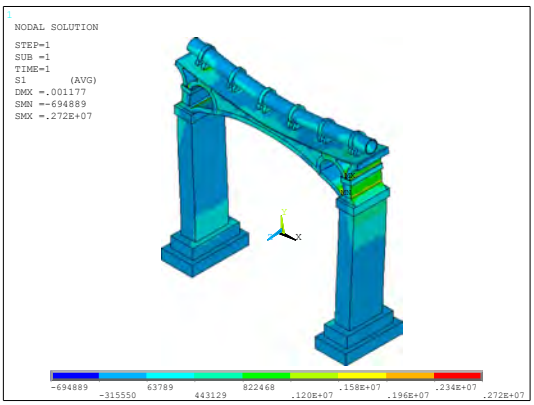

Figure 2. The first principal stress nephogram of inverted siphon under case 1 (Pa)

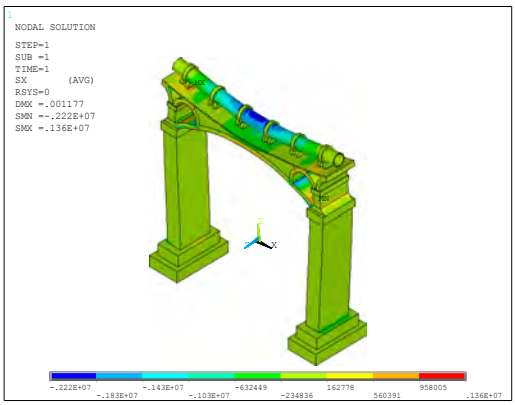

Figure 3. Longitudinal stress nephogram of inverted siphon under case 1 (Pa)

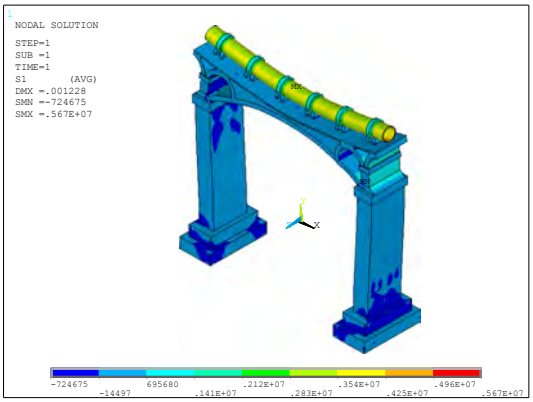

Figure 4. The first principal stress nephogram of inverted siphon under case 2 (Pa)

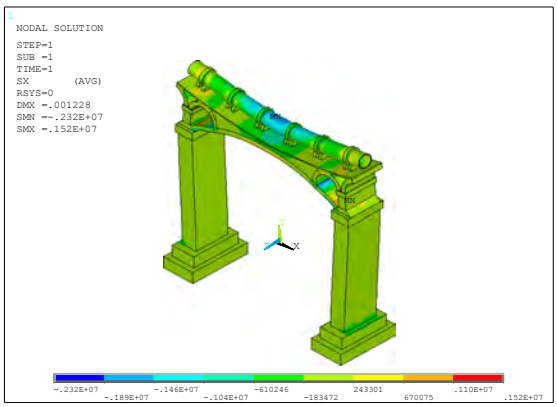

Figure 5. Longitudinal stress nephogram of inverted siphon under case 2 (Pa)

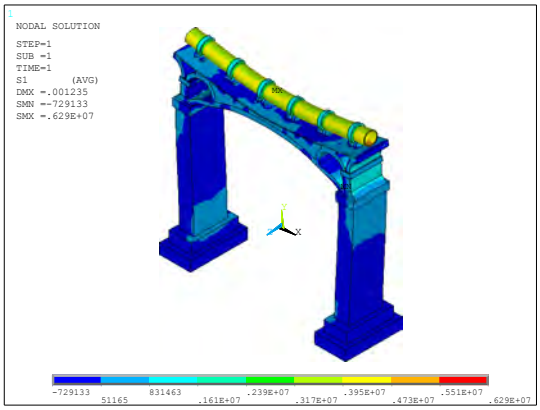

Figure 6. The first principal stress nephogram of inverted siphon under case 3 (Pa)

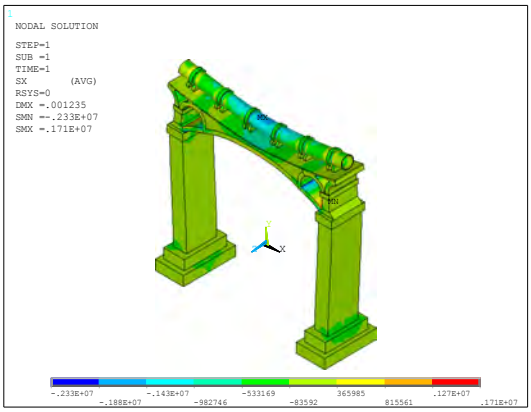

Figure 7. Longitudinal stress nephogram of inverted siphon under case 3 (Pa)

As can be seen from t Fig .2 to Fig .7, under different cases, maximum stress of inverted siphon mainly appears in the middle section of inverted siphon, which is mainly under the effect of dead weight and water pressure, inverted siphon has vertical bending, bending moment at mid-span is the largest and produces large tensile stress. Stress concentration phenomenon appears in the junction of bent and arch, stress value is on the high side.

B Deformation Analysis.

To calculate deformation distribution results under different cases, vertical displacement nephogram of inverted siphon under different cases shows in from Fig .8 to Fig .10.

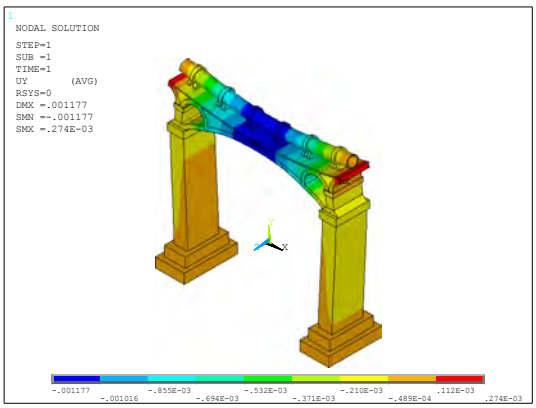

Figure 8. Vertical displacement nephogram of inverted siphon under case 1 (m)

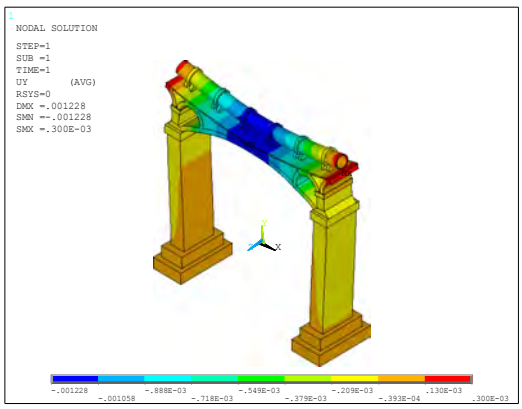

Figure 9. Vertical displacement nephogram of inverted siphon under case 2 (m)

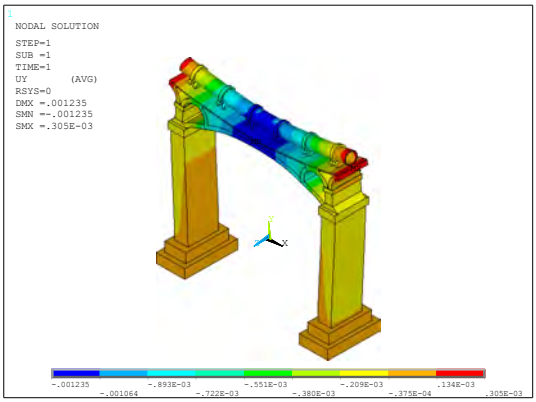

Figure 10. Vertical displacement nephogram of inverted siphon under case 3 (m)

As can be seen from Fig .8 to Fig .10, under the effect of dead weight and water pressure, maximum vertical displacement of inverted siphon mainly appears in the middle section of inverted siphon, under case 1, maximum vertical displacement of inverted siphon is 1.18 mm, under case 2, maximum vertical displacement of inverted siphon is 1.23 mm, under case 3, maximum vertical displacement of inverted siphon is 1.24 mm.

IV. CONCLUSION

In conclusion, stress of bridge type inverted siphon is small, through reinforcement can meet design needs and strength requirement. Displacement of inverted siphon structure is small, can satisfy stiffness requirement. Analysis shows that inverted siphon structure is reasonable, safe and reliable.

REFERENCES

[1] Xiaopei Sun,Xiaoling Wang,Ruirui Sun et al. Numerical Simulation for Water Conveyance of Inverted Siphon [C]. Advances in civil engineering II.2013:2407-2410.

[2] Juan Li,Zhenwei Mu,Lin Li et al. Numerical Simulation and Model Test on Hydraulic Characteristics of Long-Distance Inverted Siphon [C]. Advances in Hydrology and Hydraulic Engineering.2012:1112-1116.

[3] SL191-2008. Design Code for Hydraulic Concrete Structure[S]. China Water Conservancy and Hydropower Press, 2008.

[4] Wenliang Ma,Weifang Zou. Three-dimensional finite element analysis of trench-buried inverted siphon structure [C]. 2012 7th International Conference on System of Systems Engineering. 2012 :380-382.

[5] Xucheng Wang. Finite Element Method [M]. Tsinghua University Press, 2003.

[6] Bofang Zhu. Finite Element Method Principle and Application [M]. China Water Conservancy and Hydropower Press, 1998.

[7] Jianjing Jiang, Xinzheng Lu, Lieping Ye. Finite Element Analysis of Concrete Structures [M]. Tsinghua University Press, 2004.

[8] Lun-Yan Wang,Lei Guo. Analysis on Concrete's Measures for Qin river Inverted-Siphons in winter [C]. Proceedings of the third international conference on modelling and simulation. vol. 2, Modelling and simulation in engineering.2010:70-73.

[9] Yan, Yibo,Liu, Guoqiang,Wang, Changde et al. Discharge Error Analysis of Check Gate Combined with Inverted Siphon in a Canal Simulation System [C]. 2011 International Conference on Control, Automation and Systems Engineering. [v.1].2011:1-4.

[10] H.Y. Li, W.D. Tian, H.X. Yan. Inverted Siphons(China Water Conservancy and Hydropower Press, China 2006)(in Chinese)