# Research on PV and battery control system with energy management technology in stand-alone DC micro grid

Chunxue Wen[1,a], Zhenguo Huo[1,b], Zhengxi Li[1]

[1]Power electronics & motor drives engineering research center, North China University of Technology, Beijing, China

[a]wenchx@aliyun.com [b]844507689@qq.com

**Keywords:** DC micro gird, coordinated control, energy management

**Abstract.** In the DC micro gird control system, it has an important significance for the reliable operation of the system to maintain bus voltage stability and energy distribution. The changing/ discharging control of the battery in different mode is often used to maintain the bus voltage stability. That is, its purpose is to make the PV and the battery storage unit operating in coordination mode and to ensure efficient and stable operation of the DC micro gird. Finally, MATLAB simulations results were provided to validate the effectiveness of the proposed energy storage system control in this paper.

## Introduction

With the increase of human demand for energy, the consumption of fossil fuels results energy crisis and growing environmental pollution. Micro-grid composed of reliable renewable energy, energy storage unit and load is very useful for solving the energy crisis and the impact of distributed generation to the grid. At present, the main form of micro grid is AC micro grid, but DC micro grid has developed rapidly in resent year. The voltage phase and frequency of the DC micro grid does not need to consider, therefore, its reliability and controllability are greatly improved[3-4].

Power supply reliability is an important index for the stable operation of micro grid, DC bus voltage is the only indicator for DC micro grid system power balance. Therefore, in order to maintain the stable operation of DC micro-grid, the voltage stability should be controlled[4].

## The structure of system

DC micro-grid is composed of renewable energy, energy storage unit, load and grid inverter. All of them are connected to the DC bus through the power electronic devices, and the structure of the system is shown in Fig. 1. DC micro grid like AC micro grid can operate in either grid-connected or island mode. DC micro-grid as an effective form of utilization of renewable energy,has an important means to achieve high efficiency, environmental protection and quality of power supply. Moreover, it can improve resource utilization and reduce environmental pollution with great economic benefit[1-3].

In this paper, the PV array was used as the micro source, battery as energy storage unit of independent DC micro-grid system. It is shown in Fig. 2.

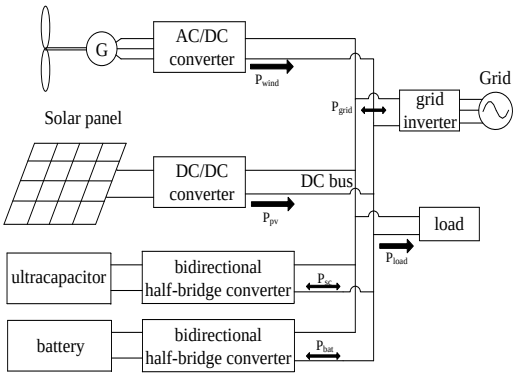


Fig.1 The structure of the DC micro-grid system

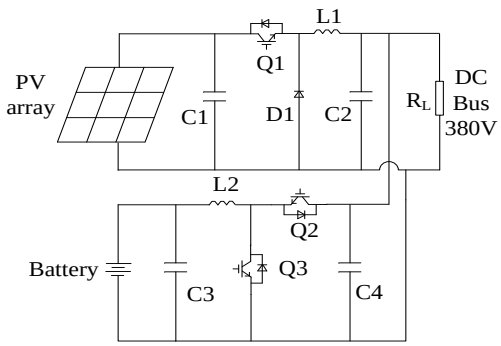


Fig.2 Stand-alone photovoltaic system

## Control strategy and operation mode

### 2.1 PV DC- DC converter control strategy

PV has two kinds of working mode, respectively, the maximum power point tracking (MPPT) mode and constant voltage control (CVC) mode[2]. The system works in the vicinity of the maximum power point and achieve the maximization of energy utilization in MPPT mode. In this paper, MPPT algorithm adopts perturbation and observation method. When the power from the PV array is enough to supply the load required power and the battery is full, light load will increase the bus voltage. At this time the boost DC-DC converter should not work in MPPT mode, it should be work in CVC mode, with voltage closed loop control to maintain the stability of the DC bus voltage.

### 2.2 Energy storage unit charge and discharge control strategy

This paper improved the charging control strategy, as shown in Fig. 4, charging control is a two-loop control system and generate the complementary PWM modulation wave driving two switches. If energy from the PV array is less than the required load energy, the battery will be switched to discharge mode. Discharging control strategy is shown in Fig. 5. It will also generate the complementary PWM modulation wave to drive two switches by PI controller[2].

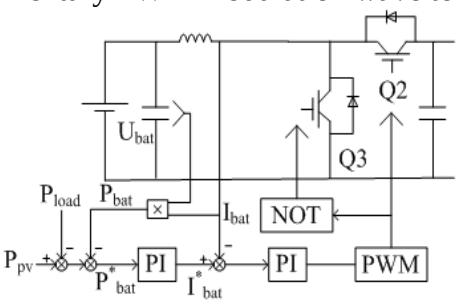


Fig. 4 charging control strategy of battery

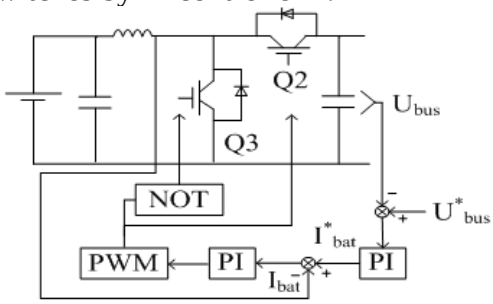


Fig. 5 discharging control strategy of battery

### 2.3 The working mode of the system and switching between the modes

The independent DC micro-grid is divided into 5 kinds of stable working modes[2], as shown in Table 1. $P_{pv}$ is the output power of PV array, $P_{load}$ is the power of load demand, $U_{bat\_max}$ and $U_{bat\_min}$ is the over-charge and over-discharge voltage of battery.

Table 1 the working modes of the system

| The power of PV and load | The voltage of battery | | |
|---|---|---|---|
| | $U_{bat}>U_{bat\_max}$ | $U_{bat\_max}>U_{bat}>U_{bat\_min}$ | $U_{bat}<U_{bat\_min}$ |
| $P_{pv}>P_{load}$ | PV:CVC;<br>Bat:cut off<br>Mode 1 | PV:MPPT;<br>Bat:charge<br>Mode 2 | PV:MPPT;<br>Bat:charge<br>Mode 2 |
| $P_{pv}<P_{load}$ | PV:MPPT;<br>Bat:discharge<br>Mode 3 | PV:MPPT;<br>Bat:discharge<br>Mode 3 | PV:MPPT;<br>Bat:cutoff<br>Mode 5 |
| $P_{pv}=0, P_{load}\neq 0$ | PV:cutoff;<br>Bat:discharge<br>Mode 4 | PV:cutoff;<br>Bat:discharge<br>Mode 4 | System down |

Mode 1: the power of PV array is more than the required energy of load and the battery capacity is already full, then PV will operate in CVC mode and battery will be cut off.

Mode 2: the power of PV array is more than the required energy of load and the excess energy will be stored in the battery, meanwhile PV will operate in MPPT mode and the battery will operate in charging mode.

Mode 3: the power of PV array is less than the required energy of load, the battery does not reach the over-discharge state and still can release energy. At this time, PV will operate in MPPT mode and the battery will operate in discharging mode.

Mode 4: the PV array will output nothing at night or a little power on cloudy days, that is, Ppv=0. The battery needs to discharge to maintain the stability of the bus voltage, at this time, PV is cut off and the battery will operate in discharging mode.

Mode 5: if the sun light is too weak in a long time, the battery will be over-discharged. Certainly, PV can not provide enough energy to the load and operate in MPPT mode to provide a small amount of energy to the important load.

This paper used a bidirectional switches control circuit [1] to change work mode, as shown in Fig. 6 and energy management system are shown in Fig. 7.

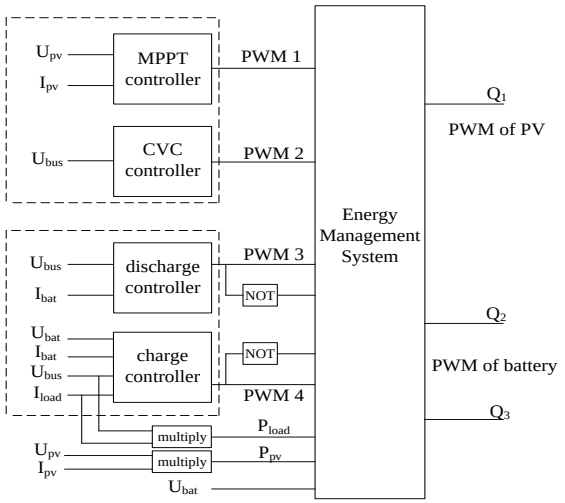


Fig. 6 Block diagram of system control circuit

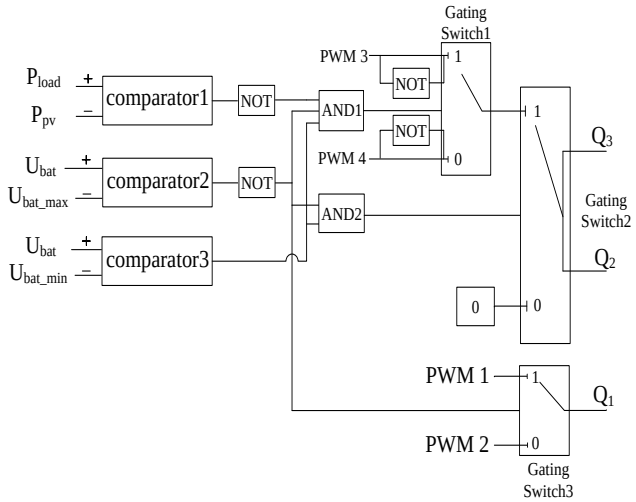


Fig. 7 Energy management control circuit

From the logic flow as shown in Fig. 7, the logic relationship can be obtained as followed.

When $P_{pv}>P_{load}$, $U_{bat}>U_{bat\_max}$, the output of Q2 and Q3 is 0 and the output of Q1 is PWM2, PV operating in CVC mode, and the system is working in mode 1.

When $P_{pv}>P_{load}$, $U_{bat\_max}>U_{bat}>U_{bat\_min}$, the output of Q2 and Q3 is PWM4 and PWM4_NOT and the output of Q1 is PWM1, PV operating in MPPT mode and battery operating in charge mode, and the system is working in mode 2.

When $P_{pv}<P_{load}$, $U_{bat\_max}>U_{bat}>U_{bat\_min}$, the output of Q2 and Q3 is PWM3_NOT and PWM3 and the output of Q1 is PWM1, PV operating in MPPT mode and battery operating in discharge mode, and the system is working in mode 3.

When $P_{pv}=0$, $U_{bat\_max}>U_{bat}>U_{bat\_min}$, the output of Q2 and Q3 is PWM3_NOT and PWM3 and the output of Q1 is PWM1, $P_{pv}=0$ and battery operating in discharge mode, and the system is working in mode 4.

## Case studies and simulation results

In order to validate the proposed control method for distributed control of PV and battery in renewable-energy-based DC micro-grid, system simulations have been carried out using SIMULINK/MATLAB, and the detailed parameters of the system are presented in Table 2.

Table 2 Parameters for system

| Components | Parameters | |
|---|---|---|
| PV array | Rated power(1000W/m$^2$, 25℃) | 3150W |
| | Rated voltage(1000W/m$^2$, 25℃) | 157V |
| Battery | Rated capacity | 200Ah |
| | Voltage of over discharge | 153V |
| | Voltage of over charge | 135V |
| | The maximum charge and discharge current | 60A |
| Voltage of bus | 380V | |

**Mode 1:** PV operating in CVC mode and battery is cutoff. At t=0.13s, the load changes from 100Ω to 80Ω, the simulation results are shown in Fig. 8.

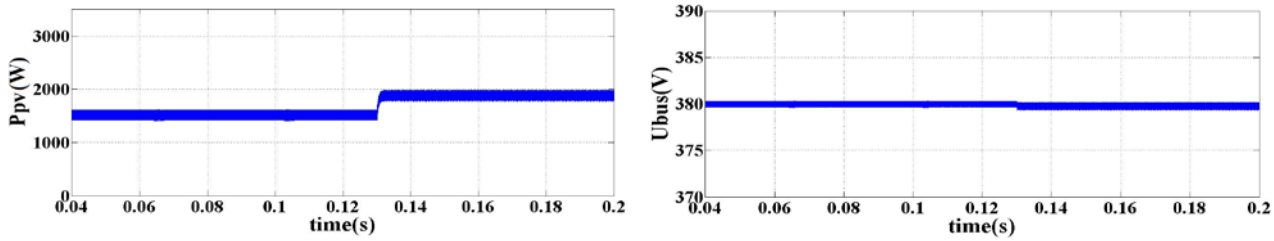


a PV power generation b The voltage of bus

Fig. 8 The simulation of mode 1

**Mode 2:** PV operating in MPPT mode and battery operating in charging mode. At t=0.27s, the load changes from 75Ω to 60Ω, the simulation results are shown in Fig. 9.

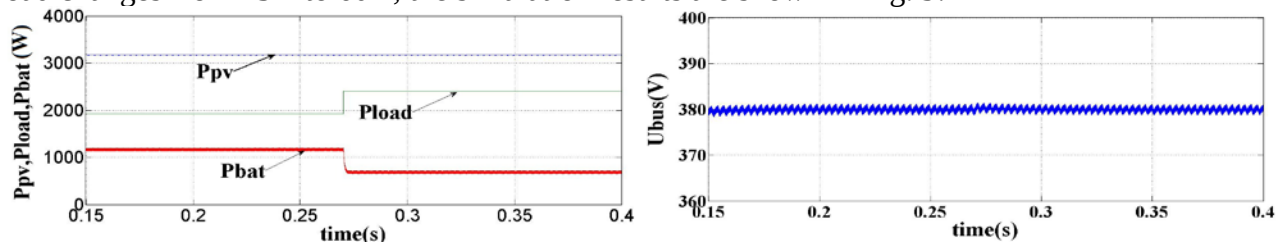


a The power of PV, load and battery b The voltage of bus

Fig. 9 The simulation of mode 2

**Mode 3:** PV operating in MPPT mode and battery operating in discharging mode. At t=0.25s, the load changes from 45Ω to 35Ω, the simulation results are shown in Fig. 10.

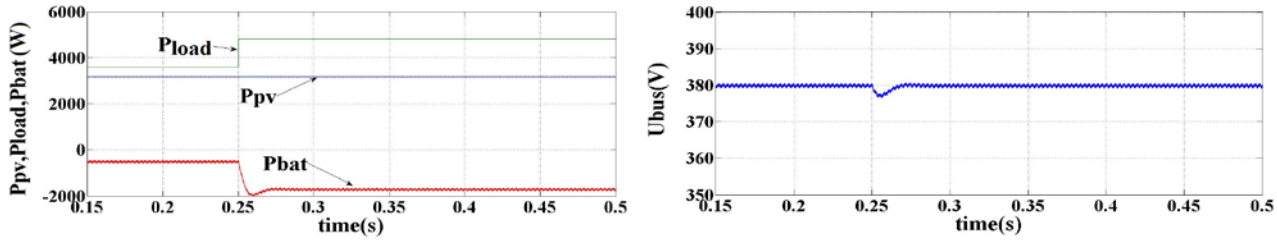


a The power of PV, load and battery b The voltage of bus

Fig. 10 The simulation of mode 3

**Mode 4:** PV is cutoff and the battery operating in discharging mode, the battery is not over discharged. At t=0.5s, the load changes from 75Ω to 65Ω, the simulation results shown in Fig. 11.

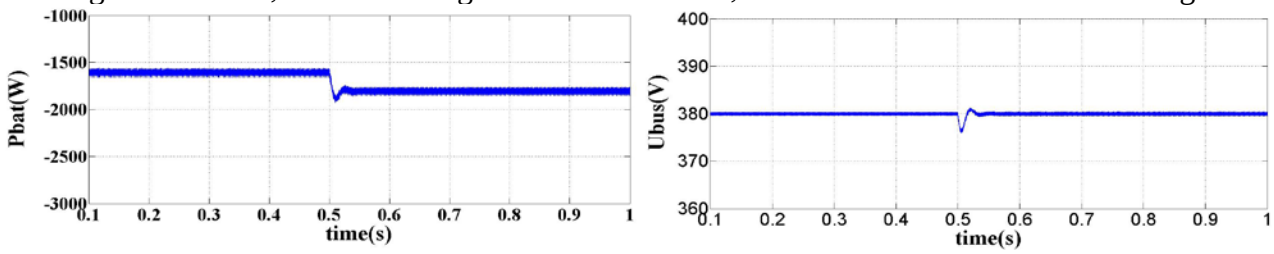


a battery discharging power b The voltage of bus

Fig. 11 The simulation of mode 4

**Transition from mode 2 to mode 1:** PV power is larger than the demanded load. Firstly, PV operating in MPPT mode and the battery operating in charging mode, in a moment, the battery is fully charged, PV switches to CVC mode and battery is cut off and the charging power is 0. The simulation results are shown in Fig. 12.

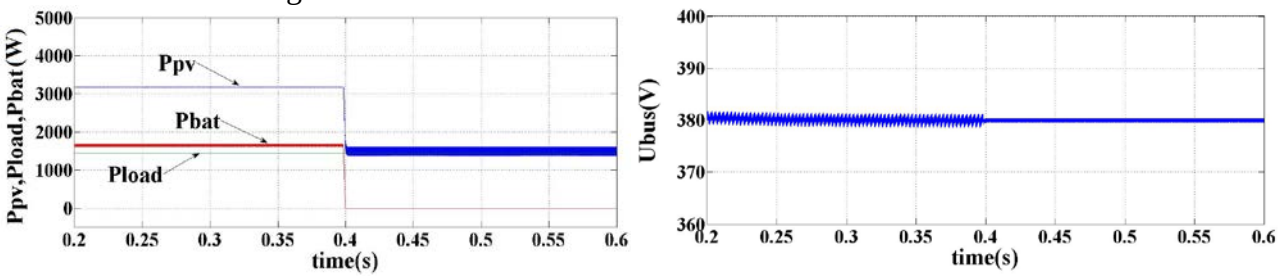


a The power of PV, load and battery b The voltage of bus

Fig. 12 Transition from mode 2 to mode 1

**Transition between mode 2 and mode 3:** Firstly the load is 37.5Ω, the load demand is greater than PV power generation and battery operating in discharging mode; at t=0.15s, the load changes from 37.5Ω to 100Ω, PV power is larger than the demanded load and battery operating in charging mode; at t=0.45s, the load change from 100Ω to 37.5Ω, PV power is less than the demanded load and the battery operating in discharging mode. The simulation results are shown in Fig. 13.

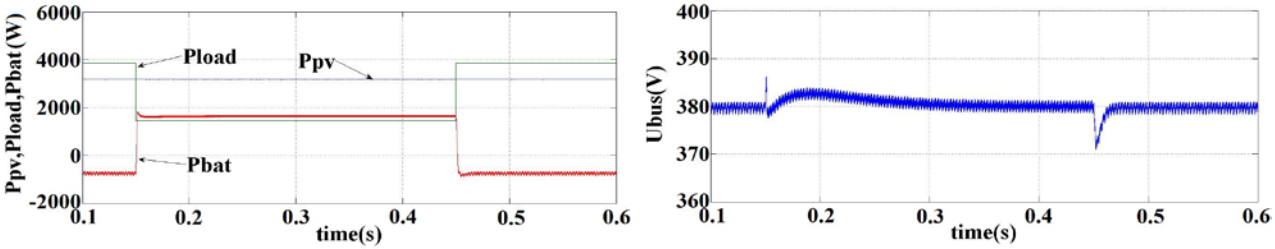


a The power of PV, load and battery b The voltage of bus

Fig. 13 Transition between mode 2 and mode 3

**Transition from mode 3 to mode 4:** Firstly, PV operating in MPPT mode and battery operating in discharging mode, at t=0.3s, PV power generation is 0, the battery supplies the power of load independently. The simulation results are shown in Fig. 14.

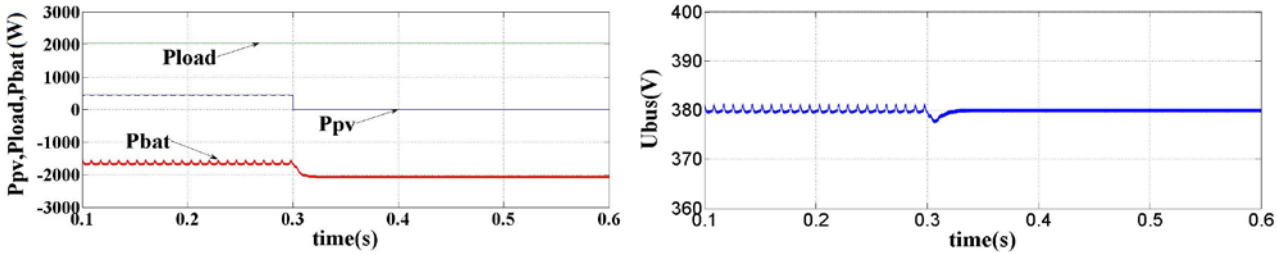


a The power of PV, load and battery b The voltage of bus

Fig. 14 Transition from mode 3 to mode 4

## Conclusion

The energy management control strategy to maintain the required constant DC voltage is introduced in this paper. System simulations have been also carried out in order to validate the control method in this paper. Results indicate that the satisfactory DC voltage control and stable operation of micro-grid during various disturbances and operating conditions can be realized effectively.

## References

[1] Zhiling Liao and Xinbo Ruan, Energy Management Control Strategy for Stand-alone Photovoltaic Power System, Proceedings of the CSEE, vol.29, No.21, Jul 2009, pp.46-52.

[2] Yan li, Panbao Wang, Jiyuan Zhang and Wei Wang, Independent DC Micro-grid Energy Management Control Strategy, Journal of Power Supply, No.5, Sep 2013, pp.1-8.

[3] Navid Eghtedarpour and Ebrahim Farjah: Distributed charge/discharge control of energy storages in a renewable-energy-based DC micro-grid, IET Renewable Power Generation, vol.8, iss. 1, April 2013, pp.45-57.

[4] Weiming Wu, Yuanbin He and Pan Gen, Key Technologies for DC Micro-Grids, Transactions of China Electrotechnical Society, vol.27, No.1, Jan 2012, pp.98-106.

[5] Kun Zhang, Chunsheng and Chengxiong Mao, Power Control of Directlv-driven Wind Generation Systems With Battery / Ultra-capacitor Hybrid Energy storage Ultra-capacitor Hybrid Energy storage, Proceedings of the CSEE, vol.32, No.25, Sep 2012, pp.99-107.