The Multi Protocol Wind and Light Control System

Hong Ma

Nanjing Institute of Industry Technology, Nanjing 210023,China

mh_purple@163.com

Keywords: wind, light, multi protocol conversion, power supply system, monitor

Abstract. The multi protocol wind and light control system, off grid power supply system,using of complementary characteristics of wind energy and solar energy. With countries' attention and power consumption field development,such as mobile communication, the power supply system is more and more attented by people. The system powerful,and multi protocol conversion function. Commonly used in the area without people on duty, such as mobile base station, health monitoring system of debris flow in mountain. Alleviating increasing depletion of the conventional energy, openned widely the application field of new energy technology, have great value.

Introduction

With the increasing of energy consumption, conventional energy starts to run out. Wind energy and solar energy, a potential new sources of energy, receiving attention by all over the world.It is the reciprocal nature that the wind energy and solar energy is becoming sustained and stable power supply. China's solar energy and wind energy reserves abundant, especially in recent years, mobile communication industry develops rapidly,base stations dotted all over the country,health monitoring system of debris flow in mountain using a large number of sensors,which consuming a large amount of electric energy.The system is suitable for the area without people on duty, providing stable, continuous power supply, have great value.

The overall design of the multi protocol wind and light control system

The multi protocol wind and light control system uses complementary characteristics of wind energy and solar energy. The structure diagram of the overall design as shown in Fig.1. The hardware of the system mainly consists of two parts: the main circuit board and control circuit board.Through the continuous power during the day and night, and obtain stable output, improve the reliability of the system. Designed the multi protocol conversion interface,such as network interface, 232 serial port, 3 road IO port(2 inputs, 1 outputs) etc. The original conversion interface can interconvert the network interface, serial port, IO port, and 3G network port, through toggling different combinations. The function of the interface interconvert greatly improves the flexibility and the convenience of data transmission. For the current,the multi protocol wind and light control system can run on different platform, for instance, intelligent feeding system, temperature and humidity detector, CO_2 detector,improving controllability,maintenanceability and convenient of the system.

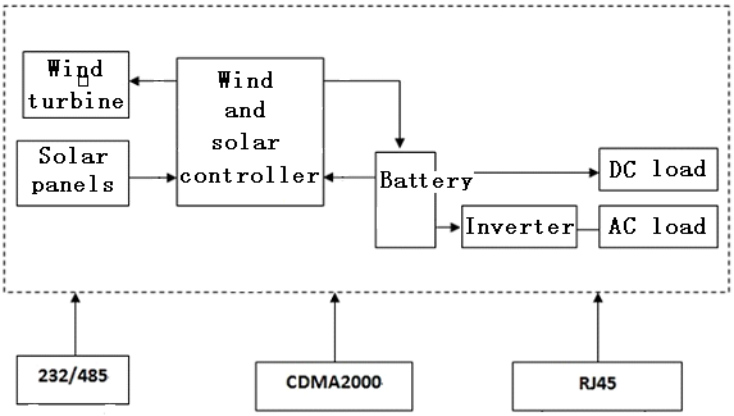

Fig.1 The structure diagram of the overall design

The hardware structure of multi protocol wind and light control system

The control part of multi protocol wind and light control system, that is, loop of the control circuit. The control part includes detection circuit, drive circuit and protection circuit, and so on, controlling the modular circuit, such as switching power supply circuit, current detection circuit, voltage detection circuit, DC / DC transform circuit, unloading circuit, etc.Because of the PIC16F877A microcontroller,American Microchip company development and production, calculates faster than ordinary MCU, and the price is lower than DSP,having high performance, so this design chooses it.The peripheral circuit of the control system to have these parts,voltage and current sampling circuit, power driving circuit, protection circuit, communication circuit, auxiliary power circuit etc.

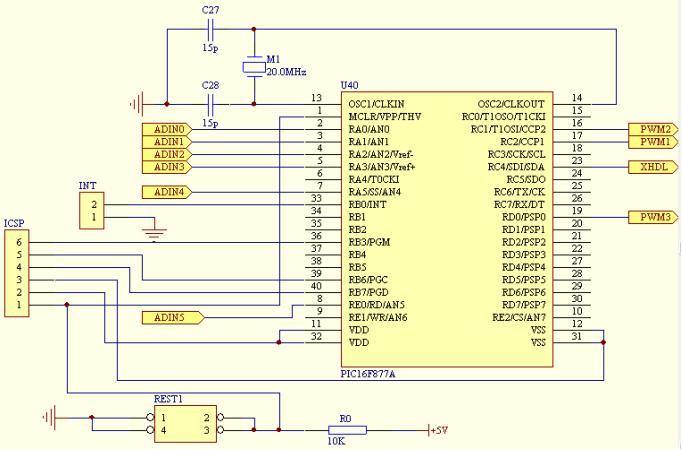

Fig. 2 Microcontroller and peripheral circuit

Microcontroller and peripheral circuit as illustrate in Fig.2. The MCU has a total of 40 pins, using dual in line package. The design choice to use 20M crystal,the capacitor is C27, C28, 15pF were selected, on both sides of the crystal ocsillater.Operating in a particular state,through the MCU reset .

The main circuit part includes wind power generator,solar battery board,scene complementation controller, battery and inverter control, no controlled rectifier,DC/DC converter, reverse charging diode,etc.. Compared to the stand-alone wind or photovoltaic power generation system, power supply under identical conditions,can greatly reduce the storage capacity of the battery.The system through the establishment mathematical model of charging and discharging process,and the control algorithm,optimised designing the control system, so as to realize the energy management.

Epigynous machine software design

Epigynous machine software design of the system selecting Microchip MPLAB-IDE, modular program designing, flexibility and versatility.

（1）Daytime subroutines

Daytime processing subroutines flow chart as illustrate in Fig.3(a). Uwp, Iwp represents wind turbine rectifier output voltage and output current, Pwp represents wind turbine output power, Pe represents wind turbine rated power.Thinking of daytime subroutines designing is calculating wind turbine output power Pwp according to the wind turbine voltage Uwp,and current sampling Iwp. When Pwp>Pe, that is, wind turbine output power is too large, opening the unloading circuit, ensuring the wind turbine operate at rated power. When Pwp<Pe, judging wind turbine output voltage Uwp and battery charging voltage Ud, if Uwp is larger than Ud, adjusting the wind power and photovoltaic power generation at the same time into the charge subroutines, if less, then adjusting the photovoltaic into the charge subroutines. This design base on the assumption that the daylight illumination is enough, that is, Usp>Ud in fig.3 is established, and now this system has two kinds of the generation state: one is wind power and photovoltaic power generation at the same time to charge when the wind is sufficient, the second though is,in the case of no wind, only the photovoltaic charger.

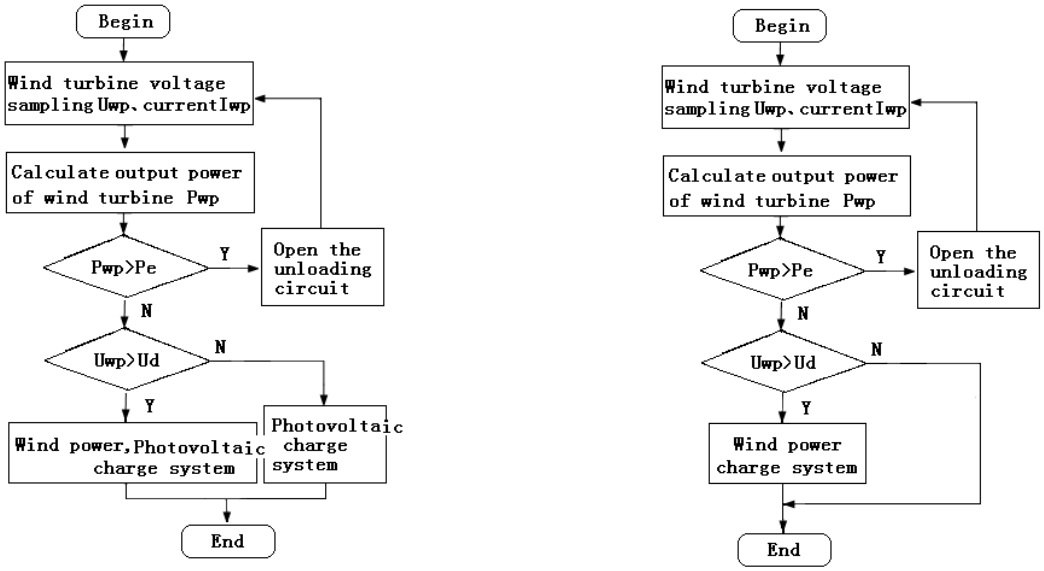

(a) Daytime processing subroutines flow chart (b)Nighttime processing subroutines flow chart

Fig. 3 The system processing subroutines flow chart

（2）Nighttime subroutines

Nighttime processing subroutines flow chart as illustrate in Fig.3(b). The ideas are similar to the daytime subroutines, just because it is during the nighttime, output voltage Uwp of wind turbine is less than the battery open voltage Ud, without calling photovoltaic subroutine.

Conclusion

The multi protocol wind and light control system use the new energy technology to design multifunctional power supply control system,which can solve the current situation of conventional energy exhausting.Through designing the hardware circuit, realizing the optimal allocation of power supply system;and through epigynous machine software designing, realizing the remote monitoring of the power supply control system. Particularly suitable for the place nobody on duty,such as mobile base station system, health monitoring system of debris flow in mountain, intelligence feeding system, temperature and humidity detection, CO2 detection, and so on. The design have multi protocol conversion components, using simple features, can be further developed, and the market was wide open.

References

[1] Jun-hai Shi,Zhi-dan Zhong,Xin-jian Zhu,Guang-yi Cao. Robust design and optimization for autonomous PV-wind hybrid power systems[J].Journal of Zhejiang University SCIENCE A, 2008,9(3) .

[2] Prasad R A,Natarajan E. Optimization of integrated photovoltaic-wind power generation systems with battery storage[J].Energy, 2006, (31) :1943-1954.

[3]ELHADIDY M A,SHAAHID S M. Parametric Study of Hybrid (Wind+Solar+Diesel) Power Generating Systems[J] .Renewable Energy, 2000, (21) :129-139 .

[4] Yang J M,Cheng K W E,Wu J,etal. The Study of the Energy Management System Based-On Fuzzy Control for Distributed Hybrid Wind-Solar Power System[J].2004,

:113-117 .

[5]H.X.Yang,Z.Wei,L.Lin. Optimal Sizing Method for Stand-Alone Hybrid Solar-Wind System with LPSP Technology by Using Genetic Algorithm [J].Solar Energy, 2008, 82 (4) :354~367.

Name: Hong Ma, F, 1979.12 birth. Nanjing people. Nanjing Institute of Industry Technology Institute of Energy and Electrical Engineering Lecturer, research direction: digital communications.

Address: JiangSu NanJing XianLin university city Cheng Pin Cheng 19 building room 506, unit 3; Code: 210023
Phone : 13951886232 (mobile)