The optimal design of receiving circuit in acoustic logging while drilling tool

Zhang Zheng, Xin Penglai, He Hongbin

Ultrasound and Physical ExplorationLaboratory, Institute of Acoustics, Chinese Academy of Science, Beijing, 100190, China

E-mail:zhangzheng10@mails.ucas.ac.cn

Keywords: logging while drilling, 11-order, highpass analog active filter, dynamic gain system.

Abstract. This paper begins with the problems encountered in logging while drilling practice, proposing the necessity and requirement of receiving circuit with rigorous design. Considering the fact that the amplitude of noise signal with low frequency is far greater than that of formation wave, this paper provides a design of 11-order high pass analog active filter based on Chebyshev principle to substantially reduce the drill pipe wave in low frequency. In addition, a dynamic gain system with a large range from -20dB to 70 dB is also embedded. Throughprecise theoretical calculation, each step interval of the dynamic gain is 3dB. The two parts combine to condition the logging signal properly. At last, the testing result shows that the real circuit possesses desired features, which can satisfy the requirement of logging while drilling activity.

Introduction

In the market of international logging service, the portion of wire-line well logging is narrower and narrower while the logging while drilling part become more and more important [1]. Unfortunately, nearly 99% of the market is dominated by the foreign well-logging service companies such as Schlumberger, Baker Hughes, Halliburton and so on [2]. What's more, a great technical blockade is kept to prevent the development of national technology. There is still no mature solution to the problems in logging while drilling field so far.

The technique of wire-line drilling is well-developed for the reason of many years' study worldwide [3]. But there are many differences in logging while drilling for the case of no time interval between the drilling operation and the logging operation. According to reference [1], Tang mentions that there exists a kind of pipe wave with low frequency(about 2~3kHz) and great amplitude among the wave field which is produced in the process of logging well drilling. To depress the low-frequency pipe wave, Leggett etc. report that by means of cutting grooves on pipe will tremendously reduces the amplitude of the pipe wave by 40dB [4]. But on the other hand, making grooves on pipe will reduce the strength of the pipe. So there cannot be too many or too deep grooves on the pipe to ensure the strength considering the special circumstance under well.

For the reasons mentioned above, the circuit part in logging well drilling tools will play an anotherimportant role in the field of pipe-wave reduction. In the normal design of circuit in traditional wireline logging tools agreat importance to be considered is to reduce the interference of power frequency (normally 50Hz) [5]. So the dynamic-gain range of signal is not very large and the order of active analog filter is not very high [6]. But in the logging well drilling field, the pipe line wave with low frequency and high amplitudeshould be given much more attention to in the design of the receiving circuit. So a special receiving circuit with larger range of dynamic gain and high order active analog filter is required.

This paper reasonably proposes a design of receiving circuit used in logging while drilling tool. It generally contains a receiving system with great dynamic gain and a high-order active analog filter. The two combined parts work together to suppress the low-frequency pipe wave in maximum.

Considerations and Design

Working Condition

The logging instruments should work thousands of meters below the surface of the earth. According to the reference [7], it propose a model of pitshaft-stratum heat transfer in the process of drilling. The principle of energy exchange between the controlling components in circulation and non-circulation process of drilling fluid is simultaneously exposed. It also provides the temperature distribution in the two different situations. Fig.1 shows the temperature distribution in the circulation process of drilling fluid with different times. Fig.2 shows the temperature distribution in the non-circulation process of drilling fluid with different times.Considering the work atmosphere of high temperature under well, the choice of chips or devices used in circuit should have a perfect property especially in temperature. In addition, the design of high-order active analog filter requires the resistors and capacitors providing a high accuracy level. As the result, metal film devices are chosen to realize the structure of the filter.

Space Limitation

According to the structure of modern LWD sonic tool worldwide, the main body of the circuit is embedded in the wall of drill collar [8] and the drilling fluid flows through the center of that. As is shown on Fig.3, the space remained for circuit in the drilling collar of Schlumberger's SonicScope 475 is narrow that a large PCB board is not permitted.As the result, all the four channels are integrated in a same board in this design.

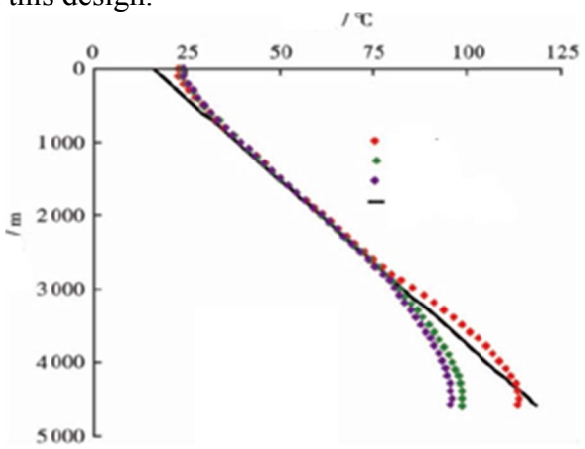

Fig.1 The temperature distribution in the circulation process of drilling fluid

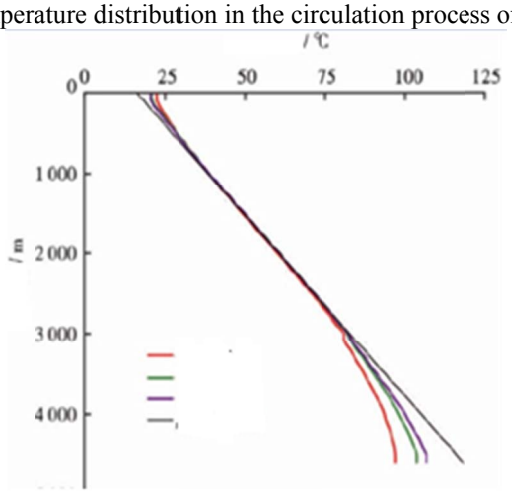

Fig.2 The temperature distribution in the non-circulation process of drilling fluid

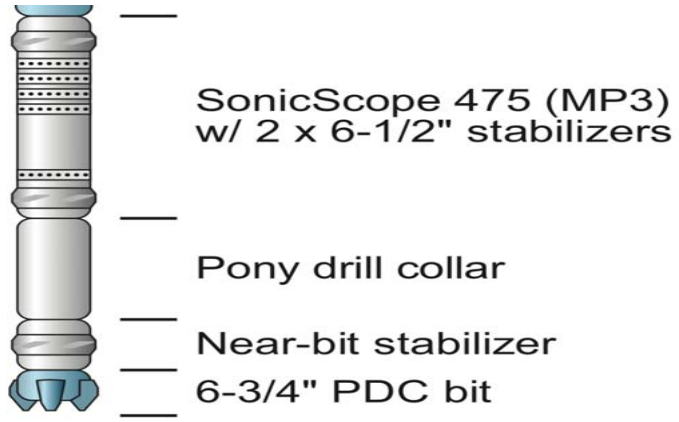

Fig.3 The location diagram of the SonicScope 475 in the drilling pipe

The Design of The structure and The Selection of the Filter

Normal kind of analog filter includes Butterworth, Bessel, Chebyshev and so on [9]. The characteristics of Butterworth filter focus on the smooth in passband, while the amplitude instopband reduces very slowly [10]. The Bessel filter has linear phase which is usually applied in audio bridge system [11]. The Chebyshev filter, which is the most similar to the ideal filter in the amplitude-frequencyresponse, contains much greater attenuation in transition zone than Butterworth filter. Although there exists fluctuation in passband, the fluctuationof the amplitude can be effectively limited through adjusting the Q value, which is the most important parameter in filter design [12]. As the result, the Chebyshev one is the best choice in the active analog filter embedded in logging while drilling tools.In the realization of the actual analog filter, AD8622 is selected as the basic amplifier unit. This chip can also operate in temperature of -40℃~125℃, maintaining low voltage noise at low power and low input offset drift [13].

When it comes to the case of analog switches, which are used to constitute the programmable gain controller, DG508 and DG509 are chosen to construct the receiving circuit. The two chips are 8-channel/dual 4-channel CMOS analog multiplexers. Both can operate in extended temperature range of -40℃~125℃ with low leakage(<3pA) and reduced switching errors [14]. The test in high temperature for 24 hours proves that the two chips can satisfy the requirements of signal acquisition under well. In order to present a distinct structure in the schematic, DG508 is used for attenuation while DG509 is for amplification, which will be explicitly described in the following paragraph.

Q Value Analysis and Parameter Selection of Filter

To the normal active analog high-pass filter in 3 orders, the basic structure is shown as Fig.4, and the transfer function is:

$$A_U(s)=\frac{V_o(s)}{V_i(s)}=\frac{A_{up}s^2C_1C_2}{(sC_1+0+sC_2+\frac{1}{R_1})\frac{1}{R_2}+[sC_1+\frac{1}{R_1}(1-A_{up})+0]sC_2}$$

$$=\frac{A_{up}s^2}{s^2+\frac{[(C_1+C_2)\frac{1}{R_2}+(1-A_{up})\frac{C_2}{R_1}]}{C_1C_2}s+\frac{1}{R_1R_2C_1C_2}}$$

$$=\frac{A_{up}s^2}{s^2+\frac{C_1+(2-A_{up})C_2}{RC_1C_2}s+\frac{1}{R^2C_1C_2}}$$

Thus:

$$A_{up}=1+\frac{R_f}{R_0}$$

$$\omega_0=\frac{1}{R\sqrt{C_1C_2}}$$

$$Q=\frac{RC_1C_2}{C_1+(2-A_{up})C_2}\omega_0=\frac{\sqrt{C_1C_2}}{C_1+(2-A_{up})C_2}$$

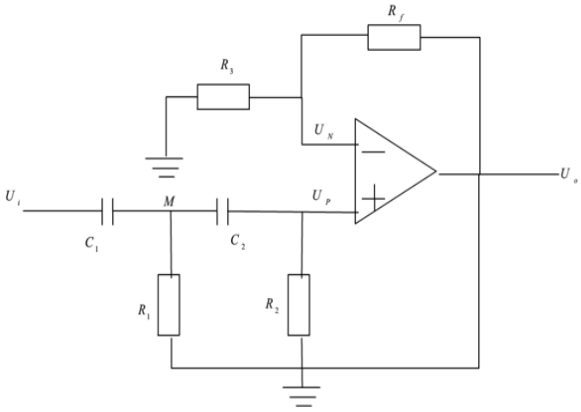

Fig.4 Basic 3-order active analog high-pass filter

In this design, the resistor of 2kΩ is chosen to be the standard value. The cutoff frequencyis controlled under 6.5kΩ and the fluctuation is limited in the range of 1dB. For the case of simplicity, just make $C_1=C_2$, then it leads to $C_1=C_2=7.46nF$ through calculation. According to the features of Chebyshev filter, the Q value of the basic 3-order filter is 2.081. Then it comes out the normalized transfer function:

$$\mathrm{F(s)}=\frac{\mathrm{s}^3}{\mathrm{s}^3+1.029*10^5s^2+3.355*10^9s+1.387*10^{14}}$$

It is the same to the 11-order active analog high-pass filter, which is just a combination of 2-order and 3-order filter. By keeping the fluctuation within range of 0.5dB and still selecting the resistor of 2kΩ as the standard. The Q value in different order is 1.045, 2.071, 3.643, 6.865, 21.75 respectively while the corresponding cutoff frequency is 20kHz, 11.52kHz, 8.410kHz, 7.035kHz, 6.48kHz. Then the normalized transfer function comes out:

$$F(s)=\frac{s^{11}}{s^{11}+4.301*10^5s^{10}+8.018*10^{10}s^9+1.176*10^{16}s^8+1.023*10^{21}s^7+9.024*10^{25}s^6+4.56*10^{30}s^5+2.822*10^{35}s^4+8.279*10^{39}s^3+3.842*10^{44}s^2+5.256*10^{48}s+1.866*10^{53}}$$

As the design process of the low-pass filter is very similar, it is omitted in this paper.

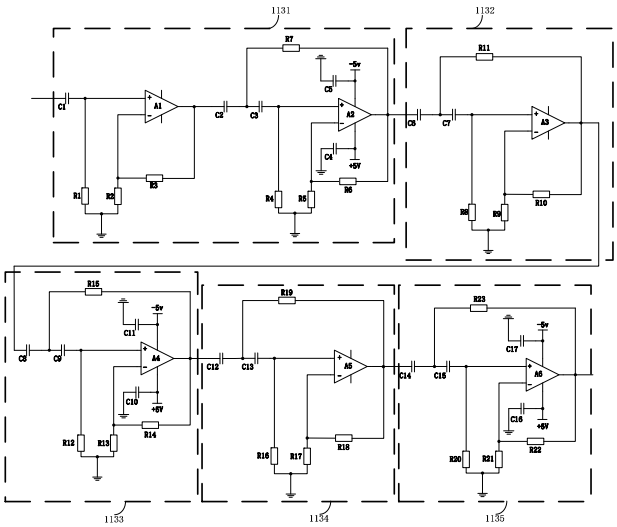

Fig. 5 The designed 11-order active analog high-pass filter

Realization of the Dynamic Programmable Gain

Generally, the gain range is divided into several steps (22 steps in wireline logging tool), and the difference between the adjacent steps is 3dB[15]. However, the range requirement is much

larger in the logging well drilling tool, the reason for which is mentioned above. So in this design, the range is expended to 32 steps and every step interval is still 3dB. To achieve this goal, the selection of resistor should be in perfect accuracy. When the first step resistor in the attenuation part, which includes DG508, is R_1, the following value of the resistors can be calculated by the function in recurrence:

$$R_n = (20^{0.3} - 1)(\sum_{i=1}^{n-1} R_i)$$

When it comes back tothe gain gear, the first step of the resistor is still simply set as R_1, the resistor of the upper following grade can be obtainedrecursively from the equation:

$$R_n = 3\sum_{i=1}^{n-1} R_i$$

As the each gain level is controlled by the code word which is send by the upper DSP, 4 series-to-parallel decoders are embedded to interpret the orders, controlling the status of each analog switch. The 32 steps' programmable gain is such a large range that can cover from -20dB to 70dB.

Test result

Firstly, the filters are brought to test. The designed parameters calculated above are put into simulation in software,and the amplitude frequency response is shown in Fig.5 below.

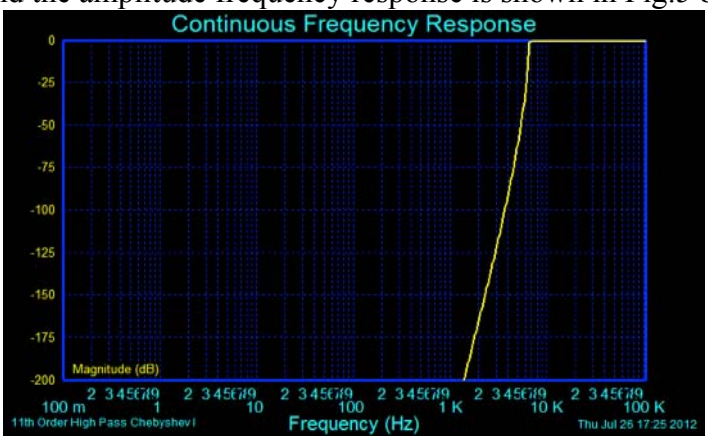

Fig.6 The amplitude frequency response of 11-order active analog high-pass filter

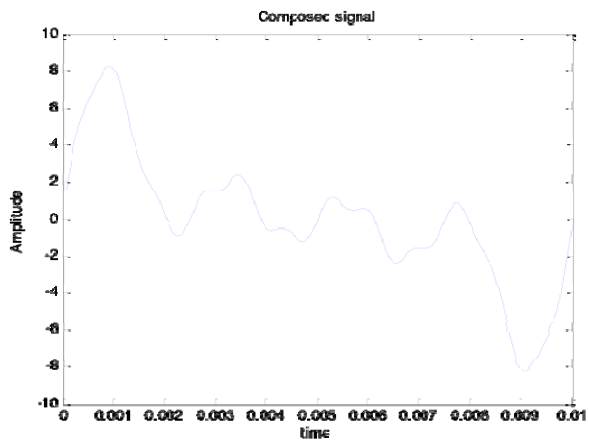

Fig.7 The composed signal with various frequency

As is shown on the Fig.6, the curve falls abruptly down to -60dB under 4kHz. If the pipe wave with low frequency is one thousand times of the target formation wave, the filter can effectively pick out the useful signal.

In the laboratory conditions, a waveform composed of 1kHz, 2kHz, 3kHz, 4kHz with 10 times

of basic amplitude and 12kHz with half of the basic amplitude, is brought to test the performance of the filter. Fig.6 shows the shape of constructed waveform. Then the composed signal is produced by a signal generator and input to the designed filter. Fig.7 shows the input and output of the filter displayed on the oscilloscope. The green wave is the composed signal as input and the blue one is the output. From the testing result, it is clearly exhibited that the low-frequency and high-amplitude signal is almost suppressed completely and the high-frequency and low-amplitude signal(12kHz with half of the basic amplitude)is maintained.

Then the performance of dynamic gain part is to be tested. As the supposed range may cover from -20dB to 70dB, which indicate that the signal can be amplified by several thousand times at maximum, the input signal ought to be less than 10mV in order to prevent distortion. So a piece of wave with 12kHz in frequency and 2mV in amplitude is chosen to be the input for the dynamic gain part. Through numerical repeated experiments, the testing result can be seen in Fig.8.The gain steps is in perfect accuracy with 3dB interval(about $\sqrt{2}$ times of the former one).

The two parts combines to play a role of receiving signal. Through the conditioning of the designed circuit, the little useful signal can be picked out while the noise interference can be tremendously suppressed.

Fig.8 The testing result displayed on oscilloscope

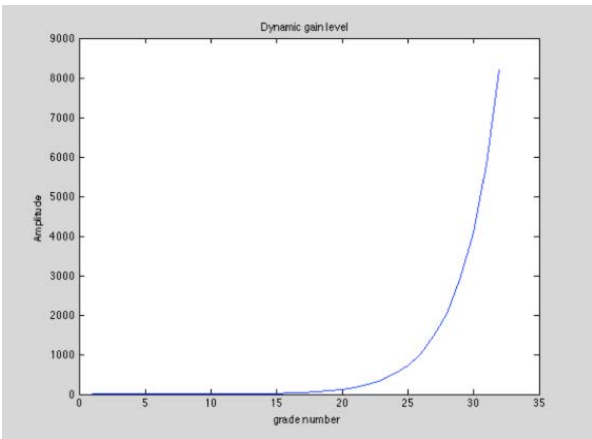

Fig.9 The dynamic gain level in each grade

Summary

This paper gives design details of receiving circuit used in logging while drilling tool based on the working conditions. Through precise theory reduction and numerical calculation of each component's value, the final whole system can process the compound signal in a proper manner, which can detect and amplify the useful signal and suppress the interferences effectively. From the perfect testing results, it is can be easily concluded that this design can properly satisfy the requirement of the logging while drilling experience.

Reference

[1] Tang X M, Zheng C H. Quantitative Logging Acoustics[M]. Petroleum Industry Press. 2004.12.

[2] Zhao P, Guo Y X, Zhang Q M. The New Progress of the Logging While Drilling Technology[J]. World Well Logging Technology.Apr.2013 Total 194.

[3] Zhang W. Study on Array Acoustic Logging Toll and its Data Processing Method[D]. University of Electronic and Technology. 2010.

[4] Legget J V, Dubinsky V, Patterson and Bolshakov A. Field test results demonstrating improve real-time data quality in an advanced LWD acoustic system[C]. SPE Annual conference and Exhibition, Paper 71732, New Orleans, Louisiana, USA 2001.

[5] Zhang Q W, Shi Y B, Zhang W. Design of Data Acquisition and Processing Circuit of Cross-Dipole Acoustic Logging[J]. Measurement and Control Technology. 2009.

[6] Xiao X P, Shi Y B, Zhang W. Design of Data Acquisition and Control Circuit of Logging While Drilling[J]. China Measurement and Test. Vol.38 No.1 Jan. 2012.

[7] Yang M, Meng Y F, Li G etc. A Transient Heat Transfer Model of Wellbore and Formation During the Whole Drilling Prossess[J]. Acta Petroleum Sinica. Vol.34 No.2 Mar. 2013.

[8] Timothy C, Ray B, Matthew F etc. Gulf of Mexico Gas Hydrate Joint Industry Project Leg II: Operational Summary[Z].

[9] Zhang W X. Digital Signal Processing[M]. Machinery Industry Press. 2011.

[10] S. Butterrworth. On the Theory of Filter Amplifier[J]. Wireless Engineer. Vol.7, 1930, pp.536-541.

[11] Thomson W E. Delay Networks having Maximally Flat Frequency Characteristics[J]. Proceedings of the Institution of Electrical Engineers.November 1949, Vol.96, No.44, pp.487-490.

[12] Daniel, Richard W. Approximation Methods for Electronic Filter Design[P]. USA:ISBN 0-07-015308-6.

[13] Dual, Low Power, Low Noise, Low Bias Current Precision Rail-to-Rail Output Op Amp[Z]. Analog Devices.

[14] 4/8 Channel Analog Multiplexers ADG508A/ADG509A. Analog Devices.

[15] Xin P L, Wang D, Chen H etc. Research on Key Technologies of Multipole Array Sonic Logging[J]. Applied Acoustics. Vol.32 No.4 July, 2013.

[16] Yuan B J Z. Design of Measurement Electronic and Circuit—Filter[M]. Science Press. 01-2005-4836.