Research on the Regenerative Braking Energy Feedback System of Urban Rail Transit

Zhongjiu Zheng1,2
1 Marine Engineering College, Dalian Maritime University, Dalian, 116026, China
2 Research Institute of China CNR Corporation Limited, Beijing, 100078, China
email: zhengzhongjiu@163.com

Abstract

Regenerative braking energy is one of the key technologies of urban rail transit system, but the application brings a large amount of problems, such as energy waste, temperature rising and grid voltage swing. This paper presents an approach to solve the above problems based on three-phase voltage source PWM rectifier, which can achieve energy bi-directional flow. The mathematical model for the rectifier is analyzed in detail. The double-closed-loop control strategy is adopted, namely, the inner current-loop track reference current and the outer voltage-loop keeps the output voltage constant. Finally, the simulation experimental results have proved the correctness and feasibility of regenerative braking energy system.
Keywords: Energy Feedback; PWM Rectifier; Regenerative Braking; Vehicle

Introduction

If using the absorbing resistor of the vehicle to absorb the regenerative energy during the vehicle operation, the problem of temperature rise occurs in tunnel and platform, and this consequently increases the weight of the vehicle, results in considerable energy consumption and increases the construction cost and operation cost of the metro. For solving these problems, it is necessary to study the regenerative energy absorption technology.[1] At present, There are several type of regenerative braking energy absorption technology including super capacitors energy storage system[2], flywheels energy storage system[3] and inverter energy feedback system[4-5] . This paper present a inverter energy feedback system based on three-phase voltage source PWM rectifier, which can achieve energy bi-directional flow.

Regenerative Braking Energy Feedback System

Regenerative braking energy feedback system makes the DC power to AC power grid using PWM rectifier which can achieve energy bi-directional flow. It

consists of regenerative braking energy unit and chopper absorption unit. The structure of regenerative braking energy feedback system is demonstrated in Fig. 1.

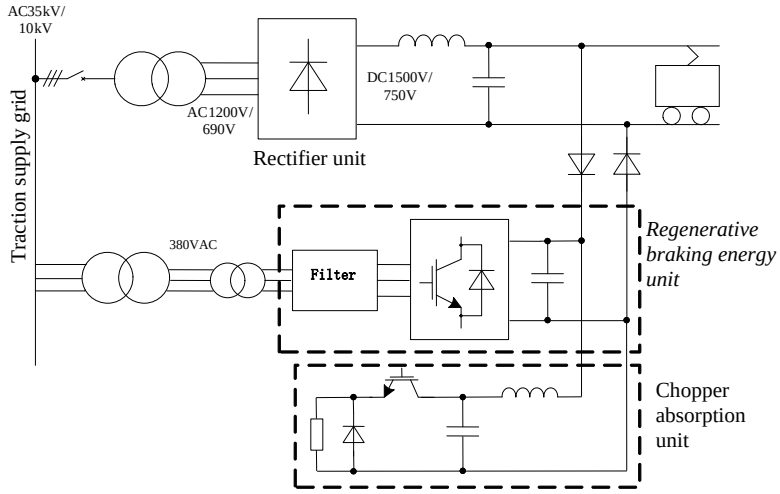

Fig. 1 The structure of regenerative braking energy feedback system

Analysis of the Three-Phase PWM Rectifier

The regenerative braking energy unit is based on three-phase voltage source PWM rectifier, which can achieve energy bi-directional flow. The three-phase PWM rectifier is consisted of six switches with anti-paralleled diodes as shown in Fig. 2.This topology is ideally applicable to DC-linked AC motor drives since it draws sinusoidal input current, and controls the DC bus voltage. Moreover, its capability of bi-directional power flow is especially advantageous for three-phase high power factor PWM rectifier.

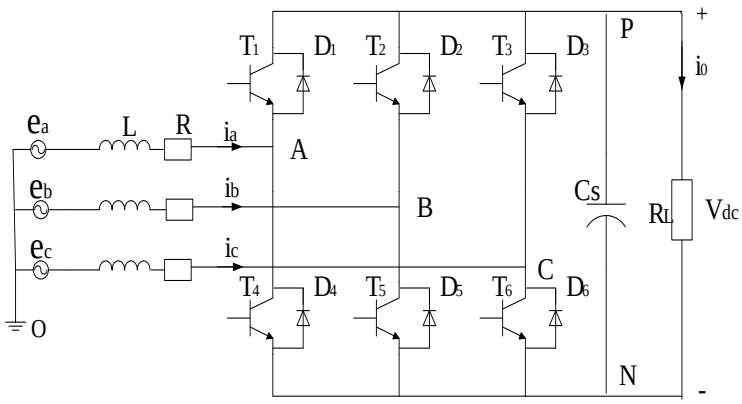

Fig. 2 The main circuit of three-phase PWM rectifier

Assuming that the three-phase voltage is symmetrical, stable and interior resistance is zero; three-phase loop resistance R and L are the same value respectively; switching loss and on-state voltage is neglectable; affection of distributing parameters is neglectable; switching frequency of the converter is high enough.

The parameters in Fig. 2 are listed below: (e_a, e_b, e_c) is phase voltage; (i_a, i_b, i_c) is line current; (U_{AO}, U_{BO}, U_{CO}) is voltage between leg midpoint and O point; L is input inductance; R is equivalent resistance of the loop; C_S is capacitance of the DC bus; V_{dc} is output DC voltage; i_o is load current; R_L is load resistance;

We can define switch function as follows,

$$S_i = \begin{cases} 1 & \text{i phase upper switch is on} \\ 0 & \text{i phase bottom switch is on} \end{cases} \text{,i=a,b,c}$$

(1)

Base on the Kirchhoff's voltage law, three-phase voltages can be computed as:

$$\begin{cases} U_{AO} = U_A - U_O = Ri_a + L\dfrac{di_a}{dt} + e_a \\ U_{BO} = U_B - U_O = Ri_b + L\dfrac{di_b}{dt} + e_b \\ U_{CO} = U_C - U_O = Ri_c + L\dfrac{di_c}{dt} + e_c \end{cases}$$

(2)

In three-phase AC symmetric system, the components are all DC variables in synchronously rotating d-q frame. When the initial reference axis is selected appropriate, q-axis and d-axis components will represent active and reactive components respectively. It is favourable to control the active and reactive components separately.

The Eq.2 is transformed into two-dimensional stationary (α-β) frame using Clarke transformation matrix as follows:

$$T_{abc/\alpha\beta} = \frac{2}{3}\begin{bmatrix} 1 & -\frac{1}{2} & -\frac{1}{2} \\ 0 & \frac{\sqrt{3}}{2} & -\frac{\sqrt{3}}{2} \end{bmatrix}$$

(3)

Eq.3 is the mathematic model in two-dimensional stationary (α-β) frame:

$$\begin{bmatrix} u_\alpha \\ u_\beta \end{bmatrix} = \left[T_{\alpha\beta/abc}\right] \begin{bmatrix} U_{AO} \\ U_{BO} \\ U_{CO} \end{bmatrix}$$

(4)

(u_α, u_β) is the voltage between leg midpoint and O point in two-dimensional stationary (α-β) frame.

When d-axis coincides with α-axis, two-dimensional stationary (α-β) frame is transformed into synchronously rotating d-q frame using Eq.5:

$$T_{\alpha\beta/dq} = \begin{bmatrix} \cos\omega t & \sin\omega t \\ -\sin\omega t & \cos\omega t \end{bmatrix}$$

(5)

Eq.6 is the mathematic model in synchronously rotating d-q frame:

$$\begin{bmatrix} u_d \\ u_q \end{bmatrix} = \left[T_{dq/\alpha\beta}\right] \begin{bmatrix} u_\alpha \\ u_\beta \end{bmatrix}$$

(6)

Writing mathematical model of three-phase PWM rectifier in synchronously rotating d-q frame as follow:

$$\begin{cases} u_d = e_d - Ri_d - L\dfrac{di_d}{dt} + \omega L i_q \\ u_q = e_q - Ri_q - L\dfrac{di_q}{dt} - \omega L i_d \end{cases}$$

(7)

In synchronously rotating d-q frame, (e_d, e_q) is phase voltage; (i_d, i_q) is line current ;(u_d, u_q) is voltage between leg midpoint and O point. It can be seen that the current (i_d, i_q) is not only affected by the input voltage of PWM rectifier (u_d, u_q), but also influenced by the disturbance of cross-coupled voltage ($\omega L i_q$, $\omega L i_d$) and phase voltage (e_d, e_q). Because the coupling between the input current, u_d, u_q are used to control line current separately by feed-forward decoupling control.

$$\begin{cases} u_d = -(k_p + \dfrac{k_i}{s})(i_d^* - i_d) + \omega L i_q + e_d \\ u_q = -(k_p + \dfrac{k_i}{s})(i_q^* - i_q) - \omega L i_d + e_q \end{cases}$$

(8)

Fig. 3 shows the principle of feed-forward decoupling control in synchronously rotating d-q frame.

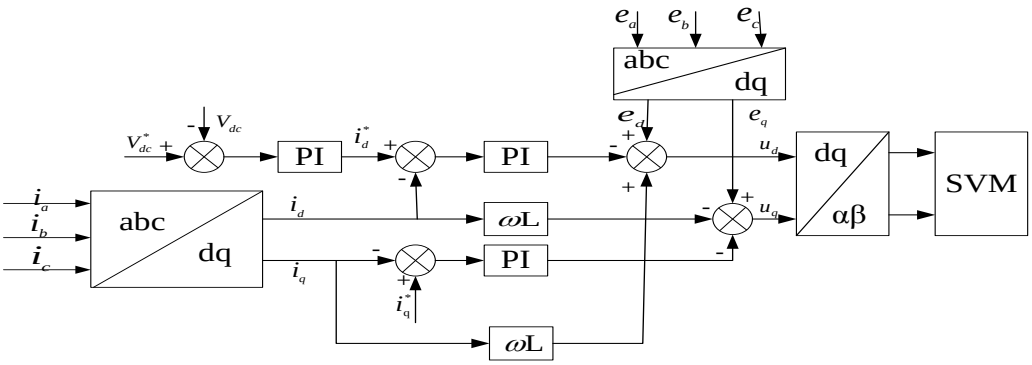

Fig. 3 Principle of feed-forward decoupling control

Simulation Analysis of the Control Strategy

In order to evaluate the regenerative braking energy feedback system performances, simulation has been carried out using the following parameters: output power P=500kW, grid line voltage e =380V, intermediate DC voltage V_{dc} =850, input inductance L =0.5mH, and the switching frequency f_s =3KHz. Fig. 4 shows the waveform of the current and voltage of phase A in inverter state. The DC power is feed back to the power grid, and the AC side current is pure sine save and high power factor.

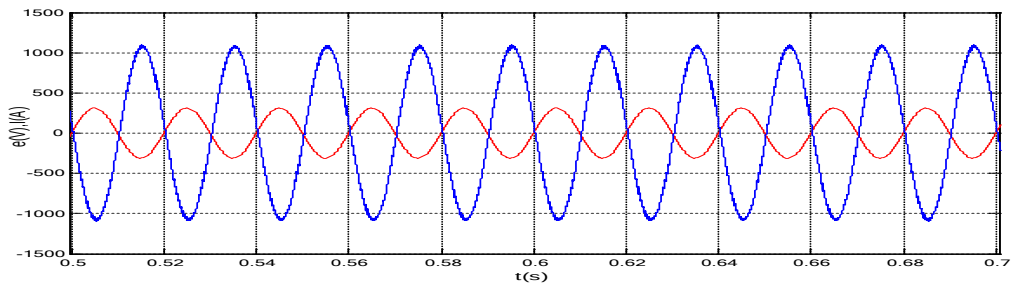

Fig. 4 The current and voltage of phase A in inverter state

Conclusion

This paper focuses on the bi-directional PWM rectifier which is used in regenerative braking energy feedback system. This approach solves the problems such as energy waste, temperature rising and grid voltage swing in The traditional method. The double-closed-loop control strategy is adopted, namely, the inner current-loop track reference current and the outer voltage-loop keeps the output voltage constant. The simulation experimental results have proved the correctness and feasibility of regenerative braking energy system.

Acknowledgement

This work is supported by“ the Fundamental Research Funds for the Central Universities” (NO.3132014045)

References

[1] Dongyang Sun, Xudong Wang, Research on Energy Feedback Strategy for Electric Vehicle, Vehicle Power and Propulsion Conference (VPPC), 2013 IEEE , pp.1-6,2013.

[2] Liu Shunxin, Li Xiang, Research on Intelligent Energy-Feedback Device for Large-Capacity Storage Battery Discharge. Power and Energy Engineering Conference (APPEEC), pp.1-4,2010.

[3] Yi Feng, Heyun Lin, Jianhu Yan, A novel energy feedback control method of flywheel energy storage system based on radial basis function neural network, pp.1-4, 2011.

[4] Jinping He,Chengxiong Mao. Design and Implementation of an Energy Feedback Digital Device Used in Elevator. Industrial Electronics, IEEE Transactions on . Vol.58 , Issue: 10 . 2011 , Page(s): 4636 – 4642

[5] Ge Ang, Wan Jianru, Niu Zhiwei, Li Bin. Research on current feed forward decoupling control for energy feedback and grid-connected device. Power Electronics Systems and Applications (PESA), 2011 4th International Conference on, pp 1-6. 2011.