The Development of Heat Treatment Furnace of 30CrMnSiA Steel in Controlling Temperature System Based on PLC

Hu Jin

The First Aeronautic Institute of the Air Force, Xinyang, Henan, 464000,China

Keywords: PLC，heat treatment furnace，control system

Abstract. This paper illustrates the heat treatment demand and process of 30CrMnSiA steel. It introduces a controlling temperature system design which bases on box heat treatment of PLC, and realizes controlling temperature automation of the parts' heat treatment process.

Introduction

There are many important structures on the plane using 30CrMnSiA steel, which strength and toughness requirements are very high. The 30CrMnSiA steel always does all kinds of heat treatments in the process of manufacturing, and the most important heat treatment is hardening and tempering which will determine the final performance. Therefore, temperature, temperature gradient and the heating time must be adjusted and controlled, so that the furnace temperature has become the key factor during the heat treatment, and it strictly conforms to the given temperature curve.

Currently, it is generally controlled by single chip microcomputer thermostat to 30CrMnSiA steel tempering heat treatment process which can realize the process control. But there are some problems such as low precision, less reliability for comprehensive performance, and so on. In this paper it adopts programmable logic controller (PLC) that widely used in industrial control field to design the heat treatment furnace temperature control system, and it applies PLC to quenching and tempering heat treatment process for 30CrMnSiA steel. Practice shows that the controller has high controlling precision, good reliability to effectively ensure the quality of 30CrMnSiA steel tempering heat treatment.

Basic composition and principle

Furnace temperature control system based on PLC of 30CrMnSiA steel tempering heat treatment is the main task to adjust and control the stove's heating temperature, holding time and taking works out of the holding furnace, which makes the furnace temperature in accordance with the given temperature control curve. The design mainly includes two parts of hardware design and software programming. Furnace temperature control system is mainly composed of heating elements, temperature sensors, temperature acquisition modules and PLC, etc. The temperature control principle is that the thermocouple sensor can measure furnace temperature, and the temperature signal is transformed to digital signal that PLC can identify by temperature acquisition module. Comparing the given value of system with the feedback temperature through the PLC, when the temperature is lower than the set temperature, PLC controls heating element to start heating; when the temperature reaches set temperature, PLC disconnect heating element. It constitutes a closed-loop negative feedback temperature control system.

PLC hardware system design

Temperature sensor and temperature acquisition module selection.

Furnace temperature control system of 30CrMnSiA steel tempering heat treatment controls temperature within 1200 C. It usually adopts thermocouple temperature sensor and infrared sensor. In this paper it adopts nickel chrome - nickel silicon MGR - 1 thermocouple sensor with low cost, good linearity, temperature measurement sensitivity, large output of thermoelectric potential, etc.

According to the measuring temperature range, the system adopts type of MD - 4 AD - TC with four channels data acquisition module, which consists of all kinds of PLC temperature acquisition and control systems and it can communicate with PLC through the RS - 485. MD series temperature acquisition module can measure multi-channel temperature accurately by thermocouple, which has cold junction compensation circuit, digital transmission and strong anti-jamming capability.

PLC hardware circuit design.

Adopting Panasonic FP0 type PLC system has many advantages which have fast running speed, small volume, simple maintenance, etc. Heat treatment furnace of PLC control system has two working forms with manual work and automatic work. When it uses automatic work form, press the "start" button, resistance furnace automatically carries on some operations by the program, such as performing heating, heat preservation, furnace cooling parts; when it uses manual work form, each step of the resistance furnace process controls separately with the temperature display.

PLC has eight input signals, those are start signal, stop signal, temperature acquisition signal, automatic work signal, manual work signal, heating signal, heat preservation signal, furnace cooling signal. It has six output signals, those are controlling the heating elements heating signal, heat preservation signal, heating indicator light signal, heat preservation indicator light signal, furnace cooling light signal and alarming signal from the furnace. Selecting Panasonic FP0 - C14 type PLC has input signals with fourteen points and output signals with fourteen points, which is considered the I/O points and saves 10% ~ 15% allowance in order to extend. The PLC hardware system designs circuit diagram according to the input/output signal, as shown in Fig. 1.

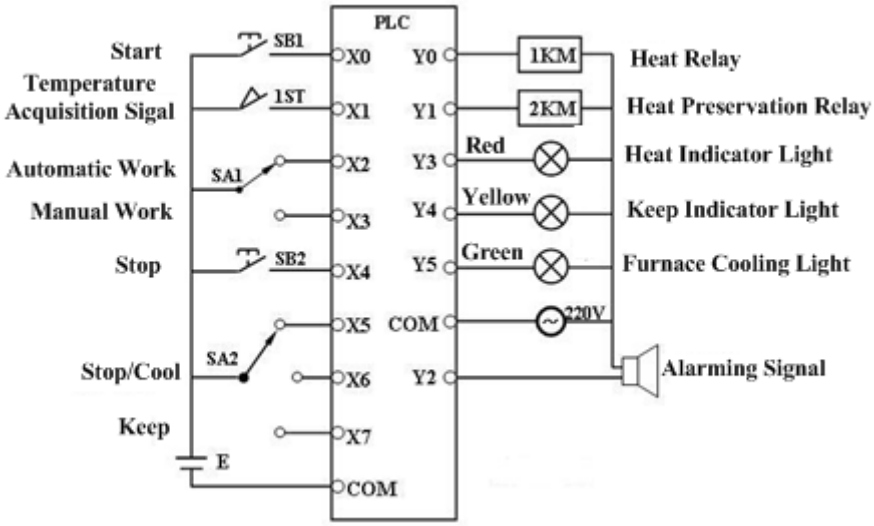

Fig. 1： Electric circuit of hardware system

Software program design

30CrMnSiA steel heat treatment process uses modular programming method, which mainly includes the main program module, manual program module and automatic program module. According to different materials and works, manual operation deals with heat treatment process without fixed ways. So the procedure is relatively simple, this article is omitted.

The main program module.

The main program is used to call the subroutine modules with a jump instruction JP to select manual program module or automatic program module, as shown in Table 1, and the program design shown in Fig. 2. When selector switch on the panel is selected in automatic state, the program automatically jump to number LBL0 the same as JP0 and executes LBL0 instructions behind the following program automatically; Similarly, pull to "manual" position, the program automatically jump to number of LBL1 the same as JP1, perform LBL1 manual program.

Table 1： Comparison Table between Field Components and PLC

I/O	Appellation	Electric-sign	Address
input	Start	SB1	X0
	Temperature Acquisition Sigal	1ST	X1
	Automatic Work	SA1	X2
	Manual Work	SA1	X3
	Stop	SB2	X4
	Heat	SA2	X5
	Cool	SA2	X6
	Keep	SA2	X7
output	Heat Relay	1KM	Y0
	Heat Preservation Relay	2KM	Y1
	Alarming Signal	Buzzer	Y2
	Heat Indicator Light	Red Led	Y3
	Keep Indicator Light	Yellow Led	Y4
	Furnace Cooling Light	Green Led	Y5

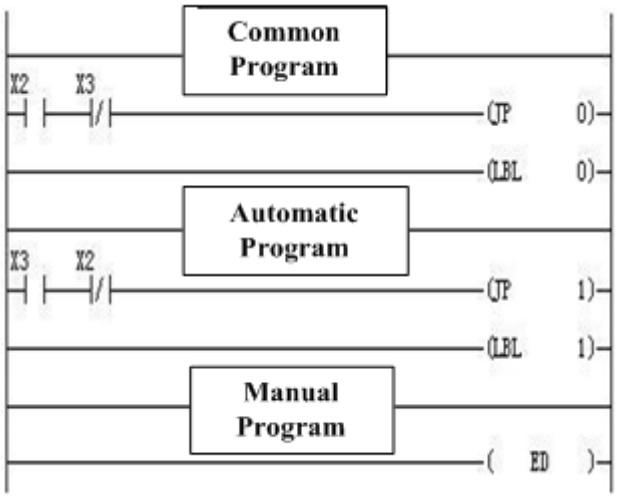

Fig.2： Main program module

Automatic program module.

30CrMnSiA steel heat treatment is quenching and tempering process, and the heat treatment temperature curve is shown in Fig. 3. The abscissa represents time, the vertical axis represents the temperature.

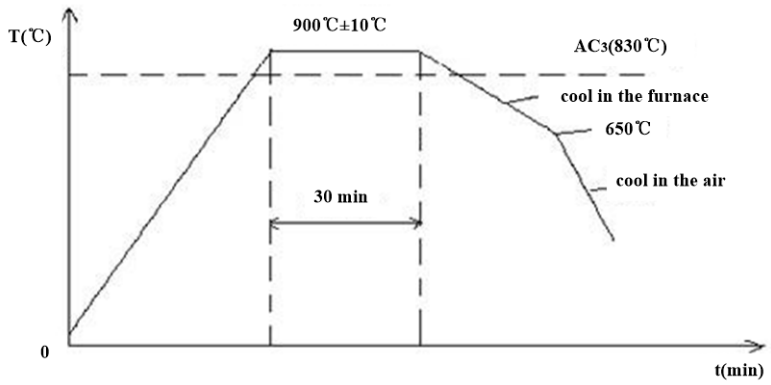

Fig. 3： 30CrMnSiA steel heat treatment temperature curve

Drawing the procedure flow chart according to the heat treatment process is shown in Fig. 4. At the beginning of the resistance furnace heating, the red indicator light contact closes, which instructs the heating condition. At the same time, MD-4AD-TC temperature acquisition module sets to work, and writes data acquisition of temperature register WX9. Acquisition value exists with the binary form of 16 bits, and the numerical value equals to ten times the current temperature. Therefore, before the data operation it should convert the binary number to a decimal number. As the temperature of the collected data is greater than or equal to K9000, resistance furnace changes over to the insulation status, and the yellow indicator light works. At the same time, the timer starts to work. After the default time to 30 minutes (1800 s), it cuts of input contact, resets the timer, stops heating element working, and cold resistance furnace turns into cooling state in the furnace condition. Comparing the collected data with H6500, if temperature is less than or equals to H6500, Y2 contact will be closed and alarm. Automatic program ladder diagram is shown in Fig. 5.

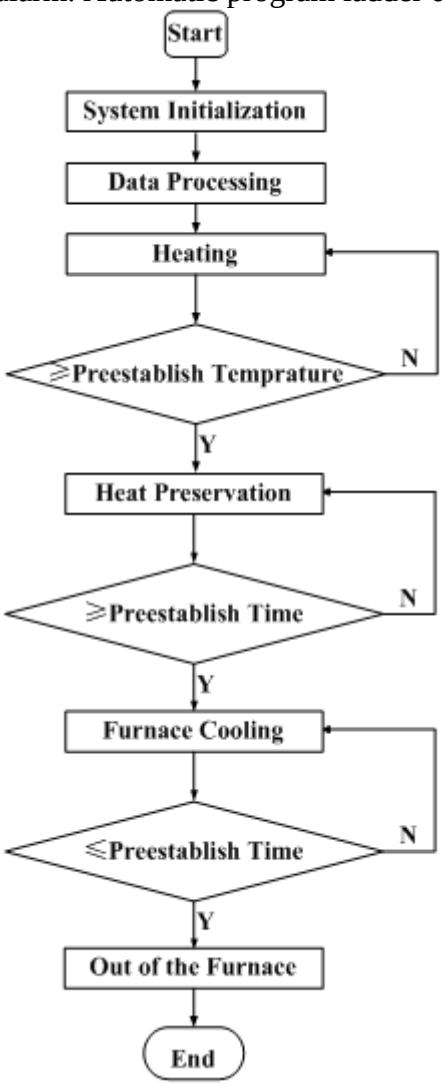

Fig.4： Heat treatment process flow chat

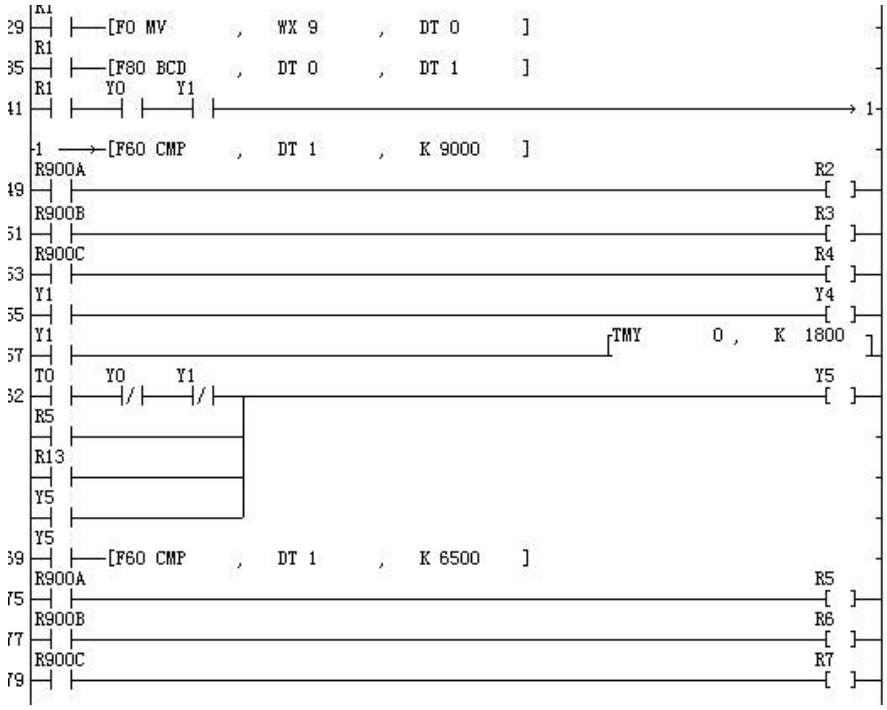

Fig.5： Automatic program ladder diagram

Conclusions

In this paper, it researches programmable logical controller as the core control element to realize the automatic control of temperature based on 30CrMnSiA steel heat treatment process automation production needs as application background. The application of this control system effectively guarantees the stability of 30CrMnSiA steel heat treatment quality.

References

[1] Liu Guo-hai, Wang Fu-liang, Shen Yue, Zhou Hua-wei, Jia Hong-ping: Realization of Neural Network Inverse System with PLC in Variable Frequency Speed-Regulating System. *Lecture Notes in Computer Science*, pp.257-266,2007.

[2] Fu Shi-hua, Zhang Qing-chuan, Hu Qi, Gong Ming, Cao Peng-tao, Liu Hao-wen: The influence of temperature on the PLC effect in Al-Mg alloy. *SCIENCE CHINA Technological Sciences*, pp.1389-1393,2011.

[3] Chang Tian-hia, Yin Pei-pei, Research on Secondary Elecondary Emission Yield Intellectualized Tesing System of Space Materials Based on Lingview and PLC. *Chinese of Journal Electronics*, pp.635-638,2014.

[4] Haniel Barbosa, David The influence of temperature on the PLC effect in Al-Mg alloy. *SCIENCE CHINA Technological Sciences*,pp.1389-1393,2011.

[5] Kubin L P, Estrin Y. Evolution of dislocation desities and the critical conditions for the Portevin-Le Chatelier effect. *Acta Metall Mater*, 38(5),pp.697-708,1990.

[6] Nalawade S A, Sundaram an M, Kishore R,et al. The infuluence of aging on the serrated yielding phenomena in a nickel-based superalloy. *Scripta Mater*, 59(9),pp.991-994,2008.

[7] Klose F B, Ziegenbein A, wei denmuller J, et al. Portevin-Le Chatelier effect in strain and stress controlled tensile tests. *Comp Mater Sci*, 26, pp:80-86, 2003.

[8] Sun L, Zhang Q C, Cao P T. Influence of solute cloud and precipitates on the spationemporal characteristics of the Portevin-Le Chatelier effect in A2024 aluminum alloys. *Chin Phys B*,18(8),pp.3500-3507,2009.