# Research of tooling test signal collection and analysis

Guozhuang Liang[1, a], Xuan Chen[1,b] , Yufeng Yao[2,c]

[1]School of Electrical Engineering, Hebei University of Science and Technology, Shijiazhuang, Hebei , 050018,China

[2]Faculty of CEMS, University of the West of England, Coldharbour Lane, Bristol BS16 1QY, UK

[a]Liang_gz@sohu.com, [b]301088424@qq.com, [c]Yufeng.Yao@uwe.ac.uk

**Keywords:** pilot; signal acquisition; signal acquisition card; data acquisition

**Abstract.** This document is intended to test the acquisition module of the signal to perform the research and analysis. First analysis of the implementation with the design requirements and, to a lesser extent, in conformity with the needs of the test system to complete the test of the material forming part of the system, mainly the acquisition module of the signal in the design, the more the signal acquisition card with the advantages and disadvantages, and other equipment, in accordance with the design requirements, the system as a whole. The part of the Software Selection Visual C + + to edit the application, the software is able to handle data acquisition and data storage, and the ability to reflect the results in the computer. This greatly simplifies the testing process. Software is a Windows dialog box of the form, click the control interface on the Start button, the program will automatically call the function to read A/D card port and specified data to complete the collection of data. Software is being used to capture the data to a certain form, display on screen.

## Introduction

The measurement and control of the system is a data-processing system, the Center is a computer, the data processing module and the corresponding sensor to complete the system of the whole test process. Monitoring and Control System contains data acquisition systems and processing systems, industrial control computer. Computer control system can not only detect signal, you can also complete the signal analysis and processing. This topic is designed to have the multi-purpose the test bed computer control system, you can work with the acquired data to the data curve is shown in the display, so that staff can easily view. Common monitoring and control system framework diagram as shown in Fig. 1.

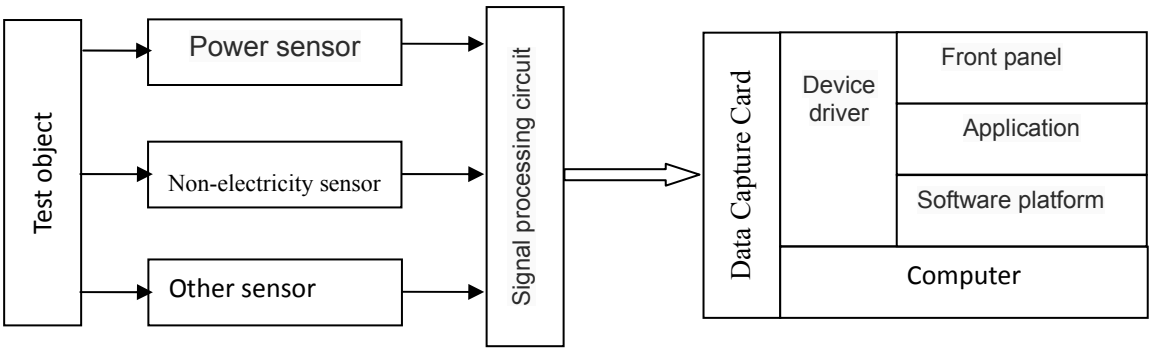


Fig. 1 Measurement and control system frame

The test object during the test as a test of the body, the measurements can be different types of sensors into an electrical signal.

Telecommunications in the sensor output, the signal processing circuitry, or zoom in, or

 

conversion, or filter after processing, as a result, to become a standard signal [1].

The circuit the signal in the data acquisition the acquisition process, it is transformed into a computer to be able to receive digital, digital signal to a device driver, and the inside of the computer, resulting in a different feature of the application.

**Hardware design**

1 Basic functional analysis

Fig. 2 shows that the test of the object parameters to analog signal or switch/pulse signal from sensor output [2]. The signal to the terminal access to the test, a signal conditioner board filtering, isolation or power amplification of the processing, and the main control board test data acquisition card for processing, and then the computer's processing into the main control board for the test, and then the power output of the Panel. the analog signal or switch/pulse signal output to the display screen of a computer, for staff to view [3].

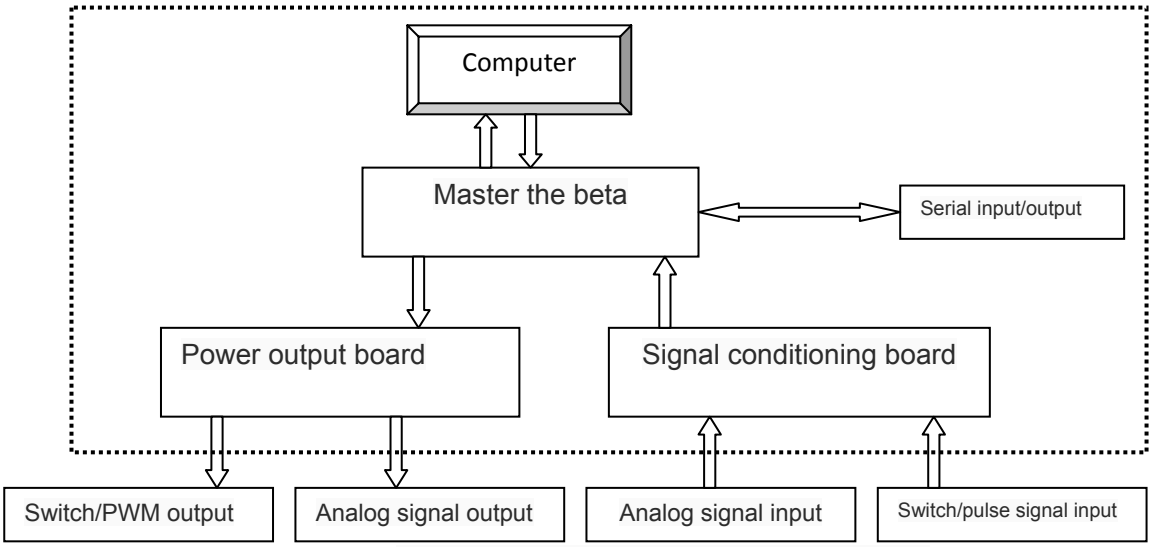


Fig. 2 Tooling test function logic diagram

Through the function logic map can also be seen in the input mode, the incoming signals have analog input signal, switch input signal, pulse input signal and Serial Port input data. In the output mode, the output signals have the analog output signal, switch output signal, PWM wave output signal and serial port output data.

2 Data capture card

The control test panel as the load transfer plate part of the core, and it has a signal input and output of the bridge. On the front we have already mentioned, the signal needs to pass through data capture card, visible data acquisition card in the master test panel above the important role played [4]. Data Capture Card in addition to capture external data signal, and control signals and output signals. It can convert analog signals into digital signals, and then send it to you want to test the computer, you can also do not convert directly to read the signal. The computer transmits the data, as well as a number of control signals, and the data acquisition card can receive, and finally to the analog or digital signal is passed to an external device [5]. This experiment is also passed to power output. The process is shown in Fig. 3.

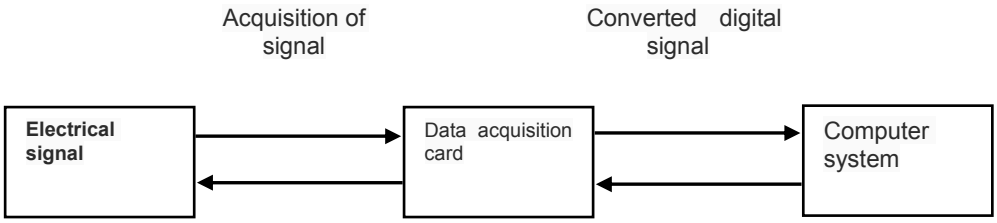


Fig. 3 Data Acquisition card convert the signal and signal transmission process

We select the data acquisition card, it will be necessary to consider the two factors: the data conversion accuracy and acquisition speed. The two aspects that directly determine our lab is able to achieve. The research and development work with the process, based on the factual situation, enter the type of signal, sampling frequency, A/D conversion Resolution, input and output of the number of channels, input voltage range, signal conditioning and signal connection terminals, and also to take into account the signal isolation and anti-interference, drivers, and software development, as well as the cost factors, we need to data capture card type for rational choice.

The above factors, we choose the PCI - 1751 Capture Card. PCI - 1751 data acquisition card is an input/output card, with a total of 48 digits of the PCI bus card. It also provides two timers, and an event counter, two timers are 16-bit, in accordance with needs can also be through the 32-bit timer [6]. PCI - 1751 although emulation is 8255 PPI mode 0, but it the buffer circuit of the drive capacity is more than 8255. Two of the 8255 PPI chip can be PCI - 1751 Data Acquisition card to emulation, it will be able to provide a total of 48-bit digital input/output. This 48-digit number can be divided into 6, each with 8 bits of I/O port. A 0, B 0, C 0, A 1, B 1 and C 1. Operator uses the software for each port for configuration. Because it has a dual interrupt handling, and has a great deal of flexibility, allowing the user to use the card when it is convenient. With each of the following utility functions, PCI - 1751 meet industrial applications of the real requirements. In addition, PCI - 1751 supports both dry contact and wet joints, so that it can be easily and other devices are connected.

3 Signal acquisition

Signal acquisition: The module is used to capture the system the components of the output signal, and the preliminary processing. It is intended to capture the signal forms generally there are 3 types: digital, analog, and discrete quantity, for DC analog, a direct A/D conversion method for acquisition; for AC analog, the first for AC and DC conversion, and then to be A/D conversion method for acquisition; for discrete quantities, the level becomes TTL level, and then by I/O circuit for acquisition; digital capture is a dedicated signal acquisition.

To achieve data capture capabilities, generally requires the system software or hardware timer interrupt, and through A/D to read are being detected by the sensor data 36. For data acquisition, it should first of all be for timing accuracy. This means that sampling interval must be consistent. We used a language of the compilation time, using DOS operating system to complete the system of data acquisition software program. With the advances in computer technology, in particular the Visual C This visualization in the development of software was born, it was in order to achieve software development of the graphical user interface features, it started to become more this is a good interactive features of the software.

The need to capture data, we should first set a number of important parameters, such as analog conversion speed, and so on, this time, we can begin the data collection work.

**Software design**

The system software key contains the System Settings module, control module, data monitoring module and the processing of the data module for most. These features are the main window to complete. Figure 4 the main window of the flow chart, the window of the command button, you can be selected, and then based on the selected module window relative to the management and operation. This mode makes it possible for users of the system as a whole has a very intuitive awareness [8].

1) System Setup Module is primarily a property page to set up a test project of basic information. These include the test of the peak size, units; as well as value parameters, such as to set the parameters of the Section will also be used to test the information for the report.

2) Control module's main task is to complete the collection of data, as well as an external device control, and its real-time is relatively high. Your computer system will be used by C have program from the port where the read data function, and to the port where the write data function of the method to complete the collection of data or to control commands to be sent, it is normal that the relevant parameters for the A/D and D/A conversion.

3) Data monitoring module of the role has mainly been over the course of the test, the acquisition of the experimental data to a curve of the display on the computer monitor, and also serve as a monitoring logic is qualified.

4) Data processing module is to test the data stored in the database, so that when you need IT staff can be through a database to query the results of monitoring. The results of the test are generated and how the various data results of the print job is processed by the module.

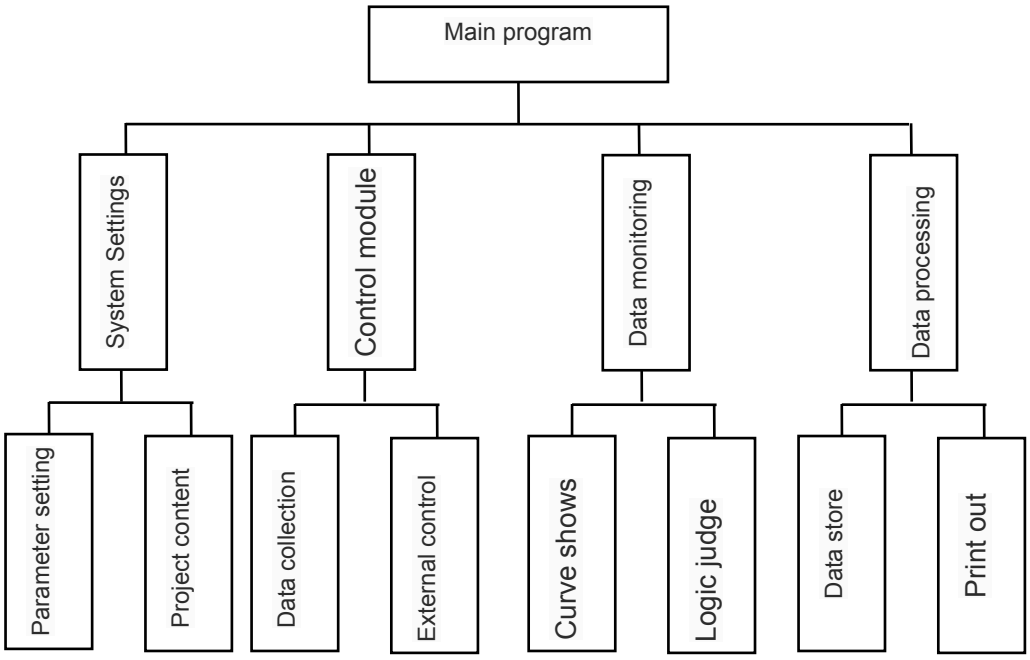


Fig. 4 Software architecture process framework

**Summary**

This thesis mainly based on industrial Personal computer as the main test bench, choose suitable type of data acquisition card, complete the design of the overall scheme of the multifunctional tooling test bench, to identify the aspects of development test-bed project collection. Write

programs to tooling test bench and debugging. By using Visual C++ program to realize data acquisition, function test, data processing and storage, output, display the function of the test results.

The process of the experiment, data acquisition and signal conversion are more frequent, and if we want to get more accurate test results and data of the need to further improve frequency and response speed of data acquisition. And it requires that we need higher standard hardware. But because of considering the economic factors, it is suggested that, from the perspective of the software part, through the optimization procedure to get better results.

## References


[1] Yulan Yang. Research of piezoelectric pulse wave detection system. Journal of changchun university of science and technology, 2011, 25(4): 153-156

[2] Sheng Liu, Yongjun Wang. Distributed control system in the application of the neutral beam injection experiment. The computer measurement and control, 2005,13 (5): 437-439

[3] Chuang Li. Multifunction vehicle traveling data recorder based on CAN bus. Dalian university of technology master thesis. Dalian university of technology, 2004

[4] D. HONG, I. HWANG, K.HUH, et al. Development of A Vehicle Stability Control System Using Brake-by-wire Actuators. Journal of Dynamic Systems, Measurement, and Control, 2008, 130(1): 137-179

[5] Shuang Feng. Research on data flow diagram drawing principle. Journal of Hebei university of science and technology, 2012, (4): 343-346

[6] H. LI, L. TESFATSION. Development of Open Source Software for Power Market Research: The AMES Test Bed . Journal of Energy Markets, 2009, 2(2): 111-128

[7] W. GAO, V. SOLODOVNIK ,A. DOUGAL, et al.. Symbolically Aided Model Development for An Induction Machine in Virtual Test Bed. Energy Conversion, 2004, 19(1): 125-135

[8] T. WHITTED, M. WEIMER. Towards A Test-bed for Trading Agents in Electronic Auction Markets. Aí Communications, 2006, 11(1): 5-19