The application of CBN on the lunar rock drill

ZHAO Deming[a], JIANG Shengyuan[b,*], TANG Dewei[c], HU Xiangkai, HOU Xuyan and DENG Zongquan

Harbin Institute of Technology, Harbin, China

[a]miancer@163.com, [b]jiangshy@hit.edu.cn, [c]dwtang@hit.edu.cn,

Keywords: CBN, Lunar Drill, Design of rock drill bit, Surface set process

Abstract. In the lunar rock drill mission, the drill bit design is restricted by the environment and system load. As the executive unit of the drill bit, the cutter and its material decides the drilling system's penetration performance. In this paper, a new kind of surface set PCBN drill is developed, and the application advantage of cubic boron nitride material (CBN) on the drill cutters is discussed. The drill bit is tested by the drill load experiments comparing with a cemented carbide drill bit.

Introduction

The background of this study is the China lunar sample return mission, which is the 3th phase of the China lunar exploration program (CE series). The drilling environment on the moon is different from the Earth mainly on three aspects, the high vacuum, the low gravity and the nonexistence of liquid water [1]. The vacuum atmosphere and the nonexistence of liquid water makes it difficult to remove the cutting chips and heat from the drill bit, which might lead to drill stuck and overheat [2]. The low gravity, which is around 1/6 of the gravity on the Earth, restricts the maximum weight on bit (WOB) [3]. Besides these restrictions, the loading limit of the detector also confines the power and size of the drill system. The earliest lunar sample drilling and return activity of the mankind is the Luna 16 from the former Soviet Union in 1970 [4]. Then after another two Luna sampler are sent, along with the Apollo series manned mission from the United States [5]. In these early drilling activities, the drill bit design is similar to those used in the terrestrial geologic exploration.

In the field of terrestrial geologic drilling, the cutters of the drill bit generally are the cemented carbide or the synthetic diamond. And the drill bit can be divided into several categories including the PDC drill, the surface set TSP drill, and the diamond impregnate drill etc. as shown in Fig. 1.

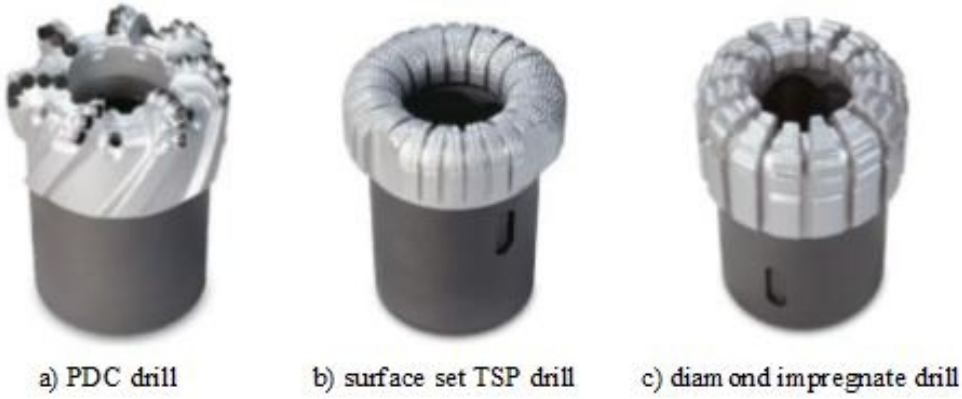

Fig. 1. Types of terrestrial geologic sampling drill bit [6]

The drill bit used in the former lunar detection missions are all type of cemented carbide drill, Fig. 2, which is an early version of PDC drill. This kind of drill bit can penetrate rocks which drillability no more than level 5~6, under the assistance of percussion mechanism [7].

Fig. 2 The Apollo 17 drill bit with 5 tungsten carbide cutting tips [8]

One of the disadvantages of the carbide cutter drill is that it has a low upper limit of penetration hardness, and easy to get worn. For most of the cases, it needs the help of percussion, and this leads to the weight increase of the drilling system. The TSP and the diamond impregnate drill bit has a better performance on penetration hardness limit, the WOB demand is lower, and it needn't the assistance of percussion. But the limitation of the diamond cutting tip drill is the temperature [9]. In the terrestrial drilling environment, liquid water can easily be involved as the coolant, and there is no such advantage on the moon. Therefore, it provides the condition for the application of CBN material on lunar drill bits.

Characteristics of CBN material

CBN is a cubic form of boron nitride that has the sphalerite crystal structure the same as diamond, and is also called β-BN. Materials with CBN crystals (Fig. 3) are often used in the tool bits of cutting tools. In general application of the diamond abrasives are preferred for aluminum alloys, stone and ceramics, whereas Polycrystalline CBN (PCBN) abrasives are used for machining steel, because diamond is soluble in iron, nickel and related alloys at high temperatures [10]. When in contact with oxygen at high temperature, CBN forms a passivation layer of boron oxide, which binds well with metals, due to the formation of interlayers of metal borides or nitrides. Yet, in the water environment, the boron oxide layer is easily get worn, and this characteristic of CBN limits its apps in the field of geologic drilling.

Fig. 3 CBN particles [11]

It shows in Table 1, the contrary of three different kinds of cutting or abrasive materials. In lunar rock drilling, CBN has a better potential application, especially as abrasives.

Table 1 characteristics of cutting or abrasive materials

	Hardness [HV]	Relative density	Crystal lattice	Stability temperature [˚C]	Iron worn	Water worn
Cemented carbide	1100~1800	14.4~15.5	-	900~1000	No	No
Diamond	10000	3.15	Cubic	700~800	Yes	No
CBN	7500	3.47	Cubic	1300~1500	No	Yes

Surface set technology

There are generally two methods that setting the abrasives to the drill, the surface set method and the impregnate method. The impregnate drill tend to contaminate the sample, therefore, the surface set method is preferred. And there are two surface set method is commonly in use, the galvanoplastic method and the braze-welding. As the CBN particle size we choose is around 0.2~0.4mm, the braze-welding is not quite applicable. The process diagram of the galvanoplastic method is shown in Fig. 4.

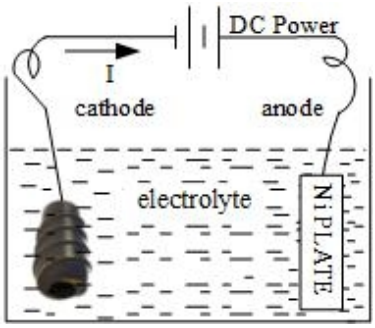

Fig. 4 galvanoplastic process diagram [12]

It is shown in Fig. 5, that the CBN galvanoplastic layer of the drill bit, and also the finished product. The final galvanoplastic area is not precisely correspond to the design, but the CBN particles fully covers the working area, so its function is not weaken. The diameter of the drill bit is 32mm and the diameter of sample hole is 14mm.

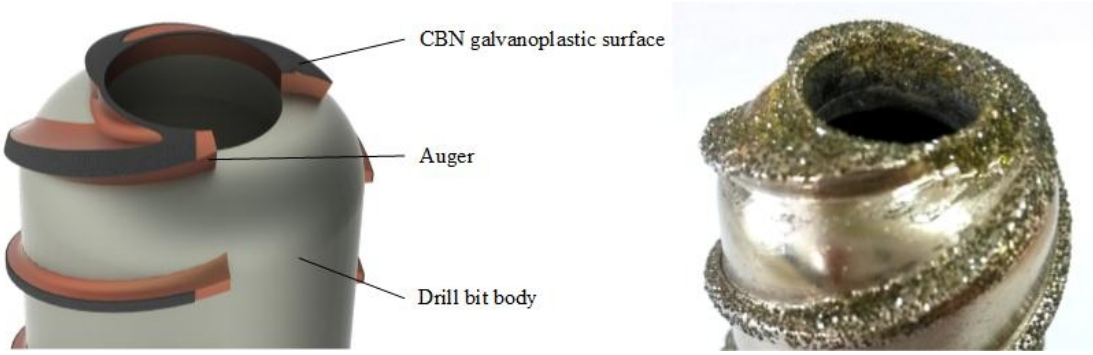

Fig. 5 CBN galvanoplastic surface

It can be seen in Fig. 6, the micrograph of the CBN galvanoplastic surface. Layers of CBN abrasives serve as main cutting tips and auxiliary cutting tips, and when the main cutting layer gets worn the auxiliary takes its place. This process keep the drill bit in a healthy penetrating mode. The material removal principle is similar to those in TSP rock drill, and the difference is that there is no cooling water cycle. The temperature can rise to over 1000˚C in the vacuum environment when the power input is around some 200W (100~200rpm).

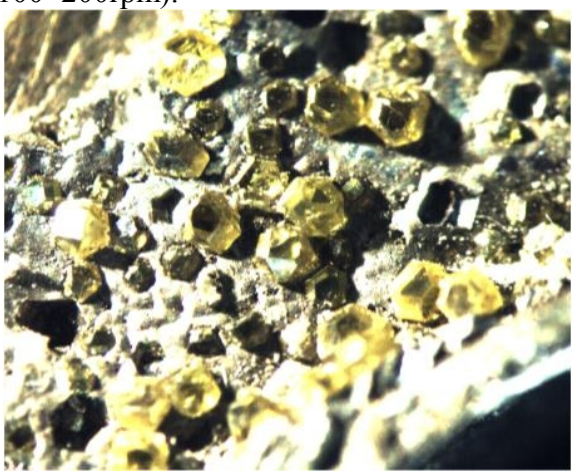

Figure 6 micrograph of the CBN galvanoplastic surface

The verifying tests of the CBN drill bit

The verification test is taken in the terrestrial environment, and the drill object is kind of marble, which properties is illustrated in Table 2. The size of the marble is 100mm×100mm×60mm cuboid. The drillability level of the marble is around 6~7, a little bit higher than the estimate lunar rock, which is considered to be mainly composed of anorthosite and porous basalt.

Table 2 the properties of test rock

Material	Density [kg/m^3]	Elasticity modulus [MPa]	uniaxial compressive strength [GPa]	uniaxial tensile strength [GPa]
Marble	2800	57	105	11

The drilling process and the bore hole after the drill is shown in Fig. 7. The rotation speed is 150rpm, and there is no percussion involved in the drill. The whole process is quiet and smooth.

Fig. 7 the experiment photograph

The average WOB of the CBN surface set drill is 62.4N, and the average torque is 0.31Nm, at the penetrating speed 1mm/min. By contrast, the average WOB and the torque of a cemented carbide (YG6x) drill with the same size and drilling parameter is 75.6N and 0.38Nm. See in Fig. 8.

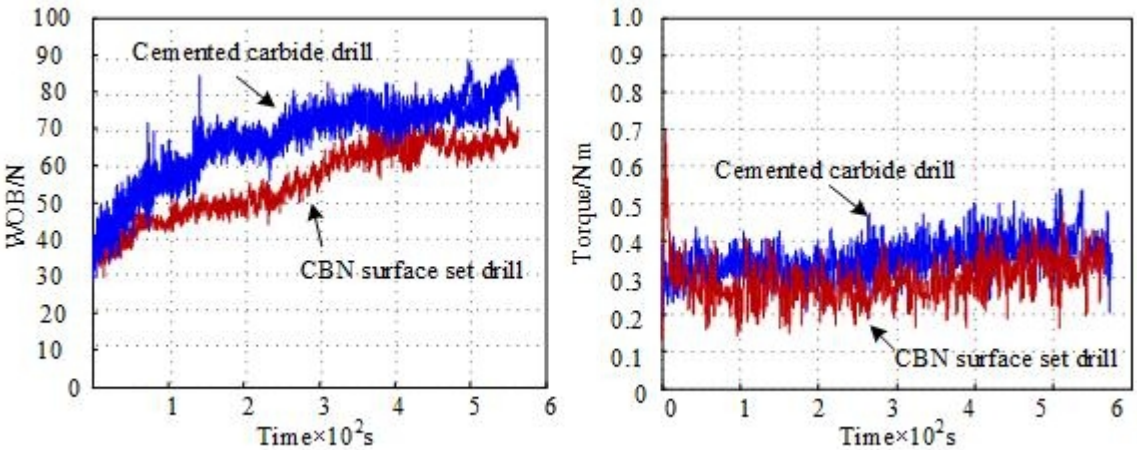

Fig. 8 the load of the cemented carbide drill and the CBN drill (penetrating speed: 1 mm/min)

The difference is more significant when the penetrating speed rises to 3mm/min. The average WOB of the cemented carbide drill is 372.5N, and that of the CBN drill is 329N. The toque is 3.32Nm to 3.21Nm. And the load of the CBN surface set drill is more stable.

Summary

The application of different kinds of material is decided by the working environment. Especially in the field of lunar rock drilling, the diamond drill is restricted by the quickly-rise working temperature, which is caused by the high vacuum of the lunar surface. But this peculiar environment provide the stage for usage of CBN as abrasives, which is excluded from the geologic field for its activity with water. In this paper, an experimental surface set CBN drill is designed and tested on marbles. The results show that it has a better load performence than the cemented carbide drill, and the drill process is more smooth. Moreover, the CBN drill needn't the assitent of pecussive devices, which can

significantly reduce the weigh of the drill system in space exploration missions. More detailed study will be taken out in the future work, along with the worn test of the abrasives.

Acknowledgements

This work was financially supported by the technology research projects of the China lunar exploration (TY3Q20110001, TY3Q20110005), the National Nature Science Foundation of China (No. 51105092, 61403106), the 111 Project (No. B07018), and the International Science and Technology Cooperation Program of China (No. 2014DFR50250).

References

[1] Lunar environment A. Fujiwara, J. Kawaguchi, Role of sample return mission muses-c in asteroid study, Advances in Apace Research 34 (2004) 2267–2269. Doi: 10.1016/j.asr.2003.07.065.

[2] K. Zacny, Y. Bar-Cohen, Drilling in Extreme Environments, VILEYVCH, 2008, Ch. Extraterrestrial Drilling and Excavation, pp. 347–546.

[3] W. Carrier, G. R. Olhoeft, W. Mendell, Lunar Sourcebook, Cambridge University Press, Cambridge, 1991, Ch. The lunar environment, pp. 27–60.

[4] M. Anttila, Concept evaluation of mars drilling and sampling instrument, Ph.D. thesis, Helsinki University of Technology, Helsinki (March 2005).

[5] W. Carrier, G. R. Olhoeft, W. Mendell, Lunar Sourcebook, Cambridge University Press, Cambridge, 1991, Ch. Exploration, samples, and recent concepts of the moon, pp. 5–26.

[6] Information on https://www.halliburton.com

[7] K. Klein, M. Badescu, Development and testing of a rotary percussive sample acquisition tool, in: IEEE Aerospace Conference Proceedings, 2012IEEE, 2012.

[8] J. H. Allton, Catalog of Apollo lunar surface geological sampling tools and containers, NASA, 1989.

[9] Y. Yang, Z. Zhang, Influence of Temperature and Vacuum on Nano-Diamond Filed Emission, in: Photonics and Optoelectronic (SOPO), 2010.

[10] Information on https://en.wikipedia.org/wiki/Cubic_boron_nitride

[11] Information on http://www.cnbeta.com/articles/247577.htm

[12] Roseleur, Alfred, Galvanoplastic manipulations, 2010, ISBN: 9781143023613.