Cooling System Circuit Analysis of ±800kV DC Power Transmission Converter Valve

Shaohua You [1, a], Qibin Tan [1], Maozhong Wang [1], Luxiang Zong [2]

[1] State Grid DC Engineering Construction Company, Beijing 100052, China

[2] North China Electric Power University, Baoding 071003, Hebei Province, China

[a]regalaxy@163.com

Keywords: ±800kV, DC, Converter Valve, Cooling System.

Abstract. Converter valve cooling system circuit consisted of internal cooling system circuit and external cooling system circuit. ±800kV DC power transmission converter valve water cooling system circuit was introduced in this paper. Certain cooling medium flow rate through the pressure of the main circulating pump promotion into the outdoor heat exchanger, through outdoor for thermal equipment will change the flow valve produces heat emissions into the air, cooling medium re-entering the thyristor tube converter valve cooling heating element, with a heat back to the main circulating pump inlet, to form a closed loop converter valve cooling system.

1. Introduction

Converter valve is the core equipment of the station. From inside the silicon controlled rectifier in operation process will produce a lot of heat and need to configuration of cooling system, to ensure that the components of the normal use and prevent the aging and ensure the converter station's normal operation. UHV ±800kV DC Power Transmission meet the need of long-distance and large capacity transmission, it can improve the transmission efficiency and reduce the transmission cost. This paper introduced ±800kV DC power transmission converter valve water cooling system circuit [1-6].

2. Valve cooling system principle

Certain cooling medium flow rate through the pressure of the main circulating pump promotion, flows through the electric three-way valve, into the outdoor heat exchanger, through outdoor for thermal equipment (the air cooler and closed type cooling tower series) will change the flow valve produces heat emissions into the air, cooling medium re-entering the thyristor tube converter valve cooling heating element, with a heat back to the main circulating pump inlet, to form a closed loop converter valve cooling system.

By the external cooling temperature control system through frequency converter control cooling fan speed to control the cooling air flow, etc., to achieve precise control of the cooling system of the cooling water temperature of the circulating cooling water. In the converter valve cooling water system for indoor pipeline and outdoor pipeline is arranged between the electric three-way valve, when the outdoor temperature is low and changing the flow valve operation under low load or zero load, by the electric three-way valve implementation regulation of the temperature of cooling water. Converter valve cooling water system to set the electric heater on the cooling water temperature of forced compensation, preventing access to the exchange flow valve of the temperature is too low and lead to condensation phenomenon.

In order to meet the requirement of high voltage power electronic equipment in high voltage condition, to reduce the leakage current in high voltage environment, the cooling medium must have very low electrical conductivity. Therefore, the main circulating cooling circuit in parallel with the water treatment circuit. A portion of the cooling medium flow through the ion exchanger, and continuously purifying the ion in the pipeline, and then through the expansion tank, and the main circulating cooling medium in the main circulating pump inlet. The fluid infusion device connected

with the ion exchanger and the constant pressure system in the constant pressure system which is connected with the expansion tank can keep the cooling medium in the pipeline, and prevent the air from entering the water cooling system.

The mechanical and electrical units and sensors in the system are automatically monitored by PLC (redundant controller), and the real-time communication between human and computer is realized through the friendly interface of operation panel.

The operating parameters of the cooling system of the flow valve and the alarm information are transmitted to the main controller in time and can be controlled by the main controller for the cooling water system in the flow valve.

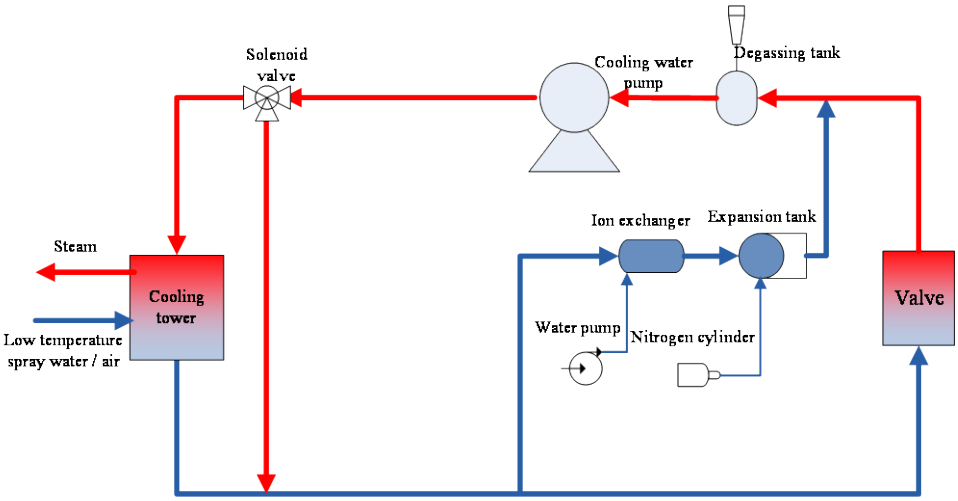

Fig.1 Converter valve water cooling system working principle

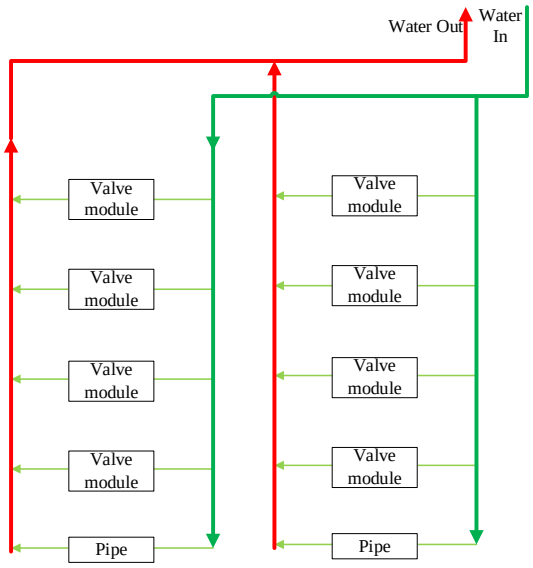

Fig.2 Valve tower water cooling principle

3. Valve cooling circuit connection

The structure of the screw down connection is adopted in the cooling system of the valve tower. The coolant is located in the top of the valve chamber, and the stainless steel supervisor is installed at the top of the valve chamber, and the PVDF is connected to the top of the valve tower at the top of the valve chamber. Each valve tower has 2 sets of PVDF out of the water mains, cooling water through the PVDF spiral pipe down to the valve module. At the bottom of the valve tower, the water inlet and outlet water PVDF main pipe is made of a stainless steel pipe for short, so that it has enough flow rate, and the average pressure of the bottom valve module and the shield cover is realized.

Each valve module contains 2 identical valve components, each with separate cooling circuit. The cooling circuit in the valve assembly is composed of a series of independent cooling branches, and the cooling circuit adopts a series cooling way to cool the thyristor radiator and the damping resistance.

Valve with the following design methods and technical measures to ensure that the flow of the series and series, and then each heating element to get the full cooling.

The module of the water supply pipe is used in the method of diagonal and out of water, which improves the uniformity of the distribution of the water distribution of the modules. Matching design of saturate reactor, water resistance thyristor radiator element pressure - flow, try to keep each branch flow resistance is consistent. The flow resistance cannot meet the same branch, or by increasing the length of pipe resistance to satisfy the basic requirements of uniform flow resistance. Through the simulation software PIPEFLOW, the traffic flow equilibrium is achieved. The rationality of the design of the distribution of water flow is verified by the test of the whole flow pressure of the valve module and the ultrasonic flow test of each branch. Each valve component branch pipe water pressure capacity are not less than 1.6Mpa。

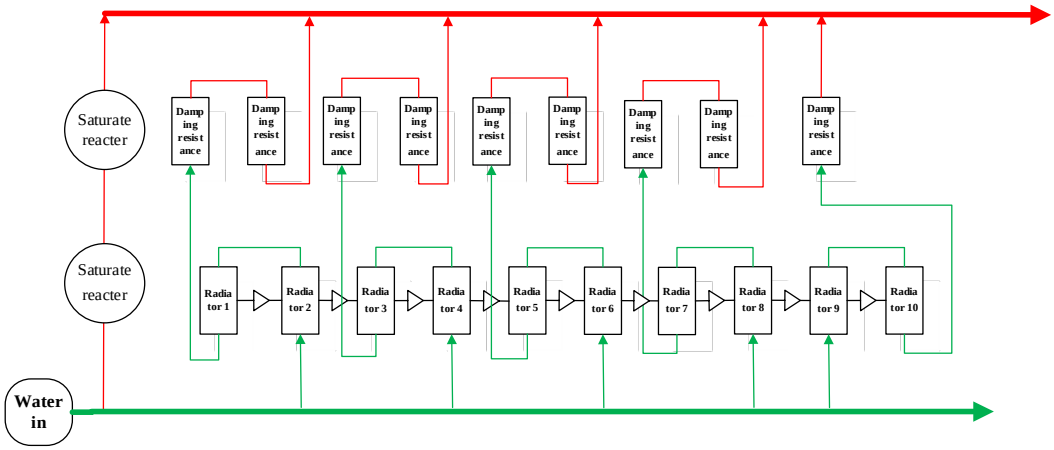

Fig.3 Valve assembly water cooling principle

The thyristor heat sink, damping resistor and saturable reactor are connected by a small caliber PVDF pipe. PVDF pipe fitting is equipped with a O type sealing ring of EPDM (Ethylene -Propylene-Diene Monomer), pipe joints and heat sink using a screw connection.

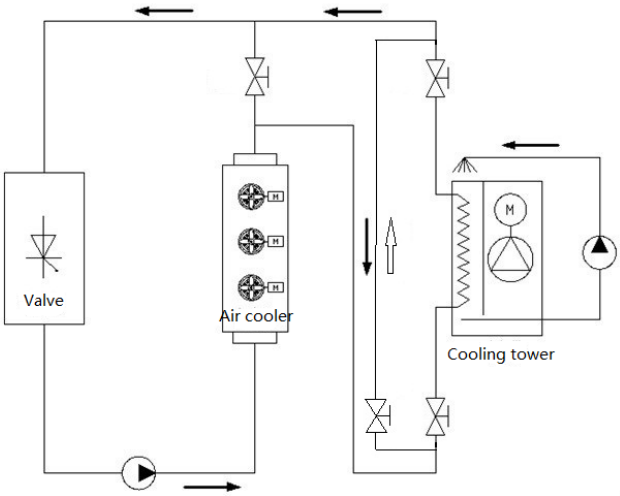

Fig.4 Valve assembly water cooling principle

4. Valve internal and external cooling system

Converter valve cooling equipment mainly includes main loop cooling circuit, deionized water loop, nitrogen regulator system, replenishment device and all pipes, valves and piping connection pieces of pipe, connection seal, flexible joint, support and hanger.

In general, the medium in the flow valve in the water heating temperature of the room in the air cooling of the air cooling device is cooled. But when the ambient temperature is close to or higher than the inlet water temperature of the valve, the air cooler will not meet the cooling requirements. Therefore, it is necessary to set up a closed cooling tower as an air cooler.

5. Summary

As converter valve is the core equipment of HVDC transmission project, ±800kV DC power transmission converter valve water cooling system circuit was introduced in this paper. Converter valve cooling system circuit consists of internal cooling system circuit and external cooling system circuit. Certain cooling medium flow rate through the pressure of the main circulating pump promotion, flows through the electric three-way valve, into the outdoor heat exchanger, through outdoor for thermal equipment will change the flow valve produces heat emissions into the air, cooling medium re-entering the thyristor tube converter valve cooling heating element, with a heat back to the main circulating pump inlet, to form a closed loop converter valve cooling system.

Acknowledgement

Project supported by “the Fundamental Research Funds for the Central University (2015QN32)” and “the National Natural Science Foundation of China (51506053)”.

References

[1]LIU Hui. Research on cooling system selection of convert valve in convert station. Jilin Electric Power, 2012, 40(1):30-32

[2]SU Hongtian, QI Xu, WU Yun. Study on market demand of UHVDC power transmission in China [J]. Power System Technology, 2005, 29(24): 1-4.

[3]WEN Yuting, LENG Mingquan, WU Jianchao. Design and type choice of converter valve cooling system in high altitude area [J]. Gugangxi Electric Power, 2013, 36(2):32-34, 61.

[4]LIU Zhenya. Results album of UHVDC projects [M]. Beijing: China Electric Power Press, 2007: 21-30.

[5]ZHANG Wenliang, TANG Guangfu. Study on wide-band model and voltage distribution of 800 kV/4750 A UHVDC valves [J]. Proceedings of the CSEE, 2010, 30(31): 1-6.

[6]WANG Yuanyou, HAO Zhijie, LIN Rui, Primary analysis on corrosion and deposit in valve cooling system of Tian- Guang HVDC project. High Voltage Engineering, 2006, 32(9):80-83.