Design of a High Voltage Power Supply for Electrocurtain

Cui Jiuxia ,Wei Shouqi，Li Xuejiao，Zhu Jinpeng，Yin Weipeng

（Guilin University of Electronic Technology, Guilin 541004, China.）

a279143637@qq.com

Keywords: Electrocurtain, High voltage source, Control strategy

Abstract. The high voltage source of electrocurtain requirements for high power factor, high efficiency, output DC high voltage of low ripple, fast fault response. In order to improve the parameters to design a high voltage source which based on three-phase buck type PWM AC chopper. It has advantages of simple topological structure, fast dynamic response, small ripple, output stability, small peak value. After the test, power supply of the performance indicators has reached the expected design goals, better than the industrial parameters, technical performance can meet the needs of electrocurtain.

Introduction

The electrocurtain is a kind of high power and low energy electron accelerator, which has the energy of 75-300 keV. It could lead to cascade electron beam. And has been applied to the coating curing, heat shrinkable film, rubber vulcanization, tapes, computer disks, sterilization and so on, and has formed the industrialization. High voltage power supply is the key technology of electrocurtain.

Aiming at the high performance requirements of high voltage power supply, a high power source device for electrocurtain accelerator is designed, which has the characteristics of high power factor, and compared with traditional high voltage source, it has features of high speed, high conversion efficiency, low output voltage ripple and high voltage stability[1][3].

Design Index.

(1) Rated power: 40kW.

(2) Rated voltage: 200kV.

(3) Rated current: 20mA.

(4) Output voltage ripple factor: ≤3%.

(5) Output voltage instability≤3%.

(6) Main transformer rated power factor≥0.9.

(7)High voltage power supply determination efficiency≥90%.

The main power supply can withstand the electromagnetic impact caused by the electron gun. When the fault occurs, the control circuit can quickly detect and respond to ensure the safety of the whole system.

Structure and Working principle of High Voltage Power Supply

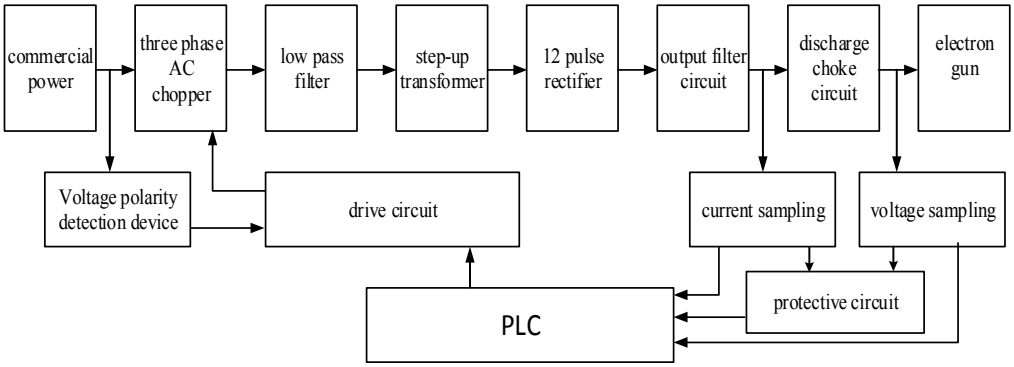

Fig.1 Schematic diagram of electrocurtain accelerator high voltage power supply

The high voltage source of electrocurtain accelerator device works principle as shown in figure(Fig. 1), It mainly consists of three phase AC chopper, step-up transformer, 12 pulse rectifier, low pass filter, the output filter circuit, discharge choke circuit, drive circuit, current sampling and the protective circuit and so on. The power supply uses digital control and output voltage feedback to stabilize the output, and has automatic monitoring and protection function.

Three-phase AC Chopper

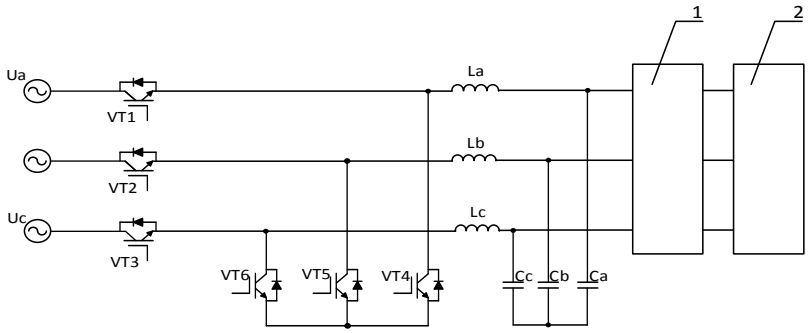

Fig. 2 Three-phase AC chopper circuit

Three-phase buck type PWM AC chopper, itself has the advantages of simple topology, high power factor, low harmonic content on network side, high efficiency of transformation, which can overcome the inherent shortcomings of the traditional AC-AC regulator.

The three-phase AC chopper circuit (Fig. 2) is controlled by the polarity of the input voltage. The switching mode of each pair of IGBT is also determined by the size of the three-phase input voltage. The minimum input phase voltage of the two IGBT has been maintained by the conduction, the other two to the IGBT is high frequency make-break，That each pair of IGBT in the respective 1/3 fundamental cycle has been maintained in the state, the remaining 2/3 cycle in the two high frequency make-break[1][2].

In a complete high frequency switching period, there are th ree kinds of working modes, which are load operation mode, dead time bypass mode, and the mode of the continued flow mode, In the three working modes，the combination of two single phase pulse width modulated AC/AC chopper can be equivalent. La, Lb, Lc, Ca,Cb and Cc are respectively composed of LC low pass filter, which can effectively filter out the high frequency harmonics of the switch.

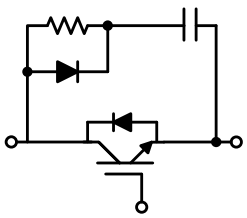

Fig.3 Buffer circuit of IGBT

IGBT buffer circuit (Figure 3). Parallel at both ends of each power tube. It consists of a fast recovery diode, absorption resistor and bypass capacitor, which can effectively change the current and voltage changes in the switch process, the current flow through the device in the opening process slow rise and switch withstand voltage rise slowly in the off process. Thereby reducing the switching losses of the device, protecting device does not exceed the allowable value of over voltage. Suppressed of electromagnetic interference caused by voltage and current spikes in the process.

12 Pulse Rectifier

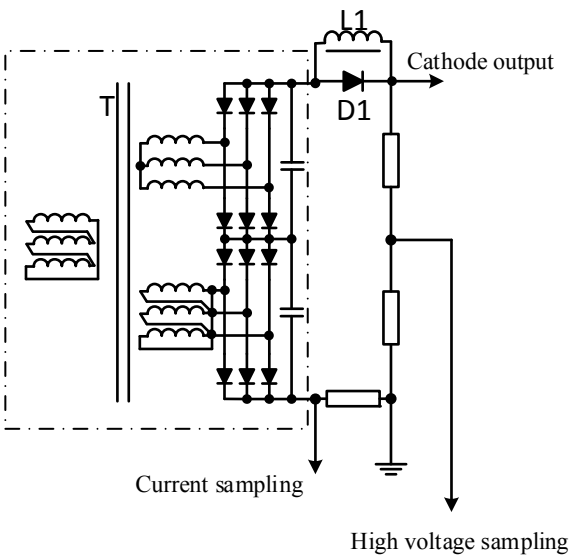

Fig.4 Diagram of 12 pulse rectifier circuit

In order to reduce the input current low order harmonics, reduce interference by harmonic and reactive power to the grid side, reduce the filter parameters, using 12 pulse rectifier. The transformer is the △/△/Y structure of the three winding mode (Fig. 4), Two groups of three-phase bridge rectifier output series, 30 degrees phase difference formed two secondary windings, two pairs of edge voltage output effective value equal.

$$U_d=\frac{6}{\pi}\int_{\frac{\pi}{3}}^{\frac{\pi}{2}}\left[\sqrt{2}U_e\sin(\omega t+\frac{\pi}{6})+\sqrt{2}U_e\sin\omega t\right]$$

U_d is the average value of the DC output voltage after rectifier, k is the transformation ratio.

$$U_o=\frac{6\sqrt{2}kDU_e}{\pi}$$

U_e is the effective value of voltage for transformer secondary side. D is the duty cycle of PWM. Uo is the output of high voltage direct current in the end. By adjusting the duty cycle of AC chopper, the adjustable output DC voltage is obtained。DC voltage pulsation 12 times in a period of AC cycle, L and C constitute a low pass filter, which filters out a large number of high frequency harmonics.

In order to protect the protection device to carry out the effective protection. Equipped with reactor L1 to suppress the high voltage discharge current rise rate in the output terminal of

high-voltage power supply to suppress discharge current efficiently. In order to avoid the transient overvoltage caused by the electron gun discharge untimely, L1 need require a high frequency and voltage silicon reactor to form a loop.

Control Strategy

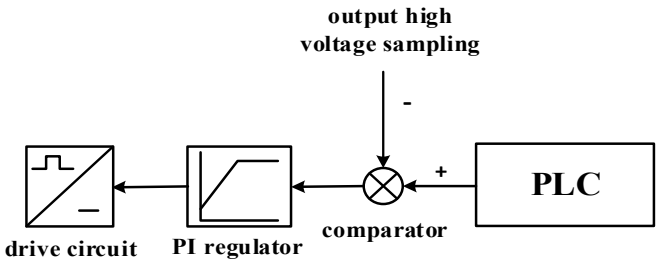

Fig.5 Diagram of control strategy

The voltage feedback is realized by Sharing voltage with precision resistors at high voltage side. The output of the DC high voltage is sampled for getting negative feedback signal. Comparing with the setting value into the PI regulator. And then compared with the high frequency triangular carrier, obtaining high frequency pulse control signal into drive circuit. By adjusting the duty ratio of IGBT in three phase AC chopper to automatic adjust voltage[3]. To maintain the output voltage of high voltage power supply stability.

Protection Circuit

High voltage discharge occurs when the electron gun is running, which can produce intense electromagnetic shock. The shock is the main reason for the failure of electrocurtain control system. In order to avoid the damage of high voltage rectifier circuit caused by high voltage discharge of electron gun, the following two methods can be adopted.

1) Slowing down the current rise in high voltage power supply when its discharge,

2) High voltage power supply quickly cut off the power supply when it discharging.

Over current protection has two forms, one is the IGBT driver chip adopt EXB840, the circuit itself has a flow protection detection function. The other is the high voltage side of the electron beam has over current protection. When there is a current, the beam sampling signal is fed back to the control circuit, the control circuit sends out a signal to the PLC, PLC respectively sends out off main circuit signal and flow display signal, realized over current protection.

Over voltage protection, electrocurtain in the operation often has a high voltage discharge phenomenon, to avoid the impact of high voltage power supply, the high-voltage power supply circuit configure reactor to suppress discharge current. At the same time, the high voltage discharge detection circuit is configured. Through the trigger pulse of the IGBT, the fast cutting and automatic restart of the high voltage discharge is achieved.

Conclusion

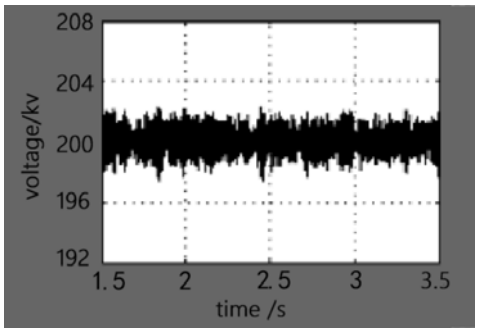

Fig.6 Experimental results

In the high voltage power supply of high power electrocurtain, using PWM-BUCK AC chopper and twelve pulse full wave rectifier, fundamentally solve the question of harmonic pollution, low power factor, voltage and current waveform distortion cause serious problems. And through the detection of the high voltage signal of the mutation to determine the occurrence of discharge, to ensure that the whole system is stable and safe operation.

Acknowledgement

This work is supported by Innovation Project of Guangxi Graduate Education, China (Grant No.YCSZ2015143).

References

[1] D. Ganuza,J.M. Del Río, I. García,F. García, 130 kV 130 A High voltage switching mode power supply for neutral beam plasma heating: design issues, J. Fusion Engineering and Design. 66 (2003) 615-620.

[2] Yang Y, Kazerani M, Modeling Control and Implementation of Three Phase PWM Converters, J. IEEE Transaction Power Electronics. 18 (2003) 857-864.

[3] Nabil A. Ahmed, Kenji Amei and Masaaki Sakui, AC Chopper Voltage Controller-Fed Single-Phase Induction Motor Employing Symmetrical PWM Control Technique, J. Electrical Power Systems Research. Vol. 55, no. 1, pp. 15-25, July 2000.