Technological Research on Dynamic Fatigue Testing Machine Calibration

F. DONG, Y.B. LIU
Heilongjiang Hua'an Jingyi Metrology Institute Co., Ltd, No. 6 Songle Street, Xiangfang District, Harbin 150046, China

ABSTRACT: The dynamic fatigue testing machine has played an increasingly important role in testing mechanical properties of materials. This paper lays emphasis on analyzing and discussing concrete issues during the dynamic calibration of testing machines based on an introduction to calibration methods for dynamic fatigue testing machine. It probes into specific calibration methods and analyzes the prospect of dynamic calibration for dynamic fatigue testing machine. Thus it can serve as reference for further improving calibration technical level of dynamic fatigue testing machine.
KEYWORD: Dynamic Fatigue Testing machine; Dynamic Calibration; Calibration Methods

1 INTRODUCTION

Significant attention has been paid to issues concerning dynamic force value in fatigue testing machine calibration. There is a deviation of 10% in fatigue test result of two facilities that were qualified in calibration of static force value according to regulations for fatigue testing machine.[1]There is also difference in cases that carrying out dynamic calibration for the fatigue testing machine after static calibration has been conducted for different dynamic force measuring systems. Therefore, demand for dynamic calibration and dynamic calibration on fatigue testing machine should be brought to the forefront. As for dynamic force value, more often than not, data of static calibration by measuring instruments serves as basis for dynamic calibration. As a result, measuring instruments that have high accuracy in static calibration may cause 100% dynamic error. Thus, there is an urgent demand for traceability of dynamic force value for fatigue testing machine.[2]

2 ISSUES CONCERNING CURRENT DYNAMIC CALIBRATION FOR FATIGUE TESTING MACHINE

If dynamic force should be measured, conducting static calibration for force sensor is far from enough. That’s because sensors with good static performance may have no good dynamic performance. [3] A force sensor may work in good condition and show reliable performance when measuring static force; however, it may result in significant deviation or even fail to work properly when measuring dynamic force. Therefore, it’s necessary to conduct dynamic calibration for dynamic force sensor which simulates the practical application.

In JJG 556-2011 Verification Regulation on Axial Force Fatigue Testing Machines, relevant technical indicators including relative error of the indication range of cyclic in force fatigue testing machine, repeatability of cyclic force range, relative error of indicated peak value of cyclic force and repeatability of indicated peak value of cyclic force, etc. are items that must be calibrated for a fatigue testing machine. [4] However, there is still no traceability for the dynamic force in calibration device for axial force fatigue testing machines in stable state sine force. Thus it will greatly affect the reliability of calibration data of stable state sine force. While fatigue testing machines are driven by a stable state force source, thus the dynamic tracing for its force value at stable state has greater practical significance.

As for dynamic force between the frequency range of 5Hz～10Hz, it can be concluded from experimental analysis that generally there will be a deviation of about 1% in dynamic calibration data and static calibration data. The higher the frequency increases, the bigger the deviation gets. It’s hard to judge whether the deviation is resulted from the calibration device or experimental facilities under calibration. Also, the difference between calibration accuracy and the accuracy for the usage of calibrator cannot be predicted either.

3 DYNAMIC CALIBRATION ON FATIGUE TESTING MACHINE BY DYNAMIC FORCE CALIBRATION DEVICE

Different standard weights and reference acceleration sensors are adopted for the traceability of value of dynamic force of the dynamic force calibration device on sine force source controlled by electro-hydraulic servo.

The dynamic force calibration device for the fatigue testing machine consists of electro-hydraulic servo based stable state sine dynamic force source and dynamic measuring instrument which includes reference dynamic force sensor, accelerometer and data collecting and processing units.

Through the function of Newton's second law on different weights (for example 1t, 0.5t, 0.2t, 0.1t and 50kg, etc.) with calibrate electro-hydraulic servo based stable state sine force to calibrate the dynamic measuring instrument which consists of dynamic force sensor, accelerometer and data collecting and processing units so as to verify the dynamic characteristics of dynamic force sensor. Place or distribute accelerometer on standard weight separately and collect frequency and accelerated speed in dynamic force calibration in real time to realize collection and calibration of dynamic force through data analysis. Conduct data collection and calibration on dynamic measuring device through dynamic force control on sine wave, triangular wave and square wave.

In the traceability relationship of fatigue testing machine, reproduce the quality and accelerated speed parameter of dynamic force of the fatigue testing machine calibration device to trace the to the national primary standard of quality and vibration respectively to complete traceability of the dynamic force of fatigue testing machine through fatigue testing machine calibration device.

Connect the dynamic measuring device which consists of reference dynamic sensor and data collecting and processing units in the fatigue testing machine dynamic calibration device in series with the fatigue testing machine to conduct online systematic dynamic calibration. The sketch map is as shows by Figure 1.

4 GETTING STARTED

4.1 *Static Force*

Loading value before conducting dynamic force circulation.

4.2 *Frequency*

The periodicity per sec. for the change in load when dynamic force circulates.

4.3 *Peak Value*

The maxima loading value of the dynamic force circulation.

4.4 *Valley Value*

The minimum loading value of the dynamic force circulation.

4.5 *Average Value of Dynamic Force Circulation*

The average value of sum of the absolute value of the peak value of dynamic force circulation and the absolute value of its valley value.

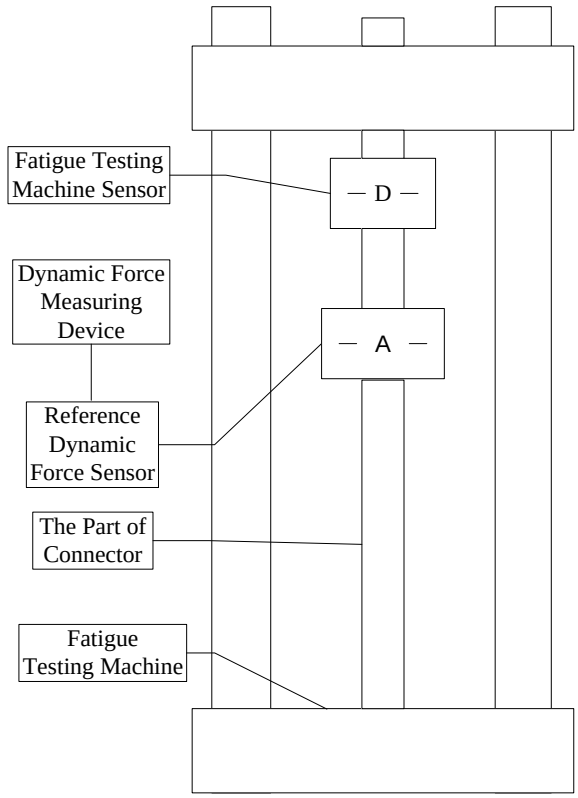

Figure 1. Sketch Map for conducting online dynamic calibration for firtugue testing machine.

5 CONCLUSIONS

After the calibration, a calibration certificate for the fatigue testing machine should be issued. The calibration certificate should correctly and objectively report calibration result, which should be presented in form of calibration data and calibration curve, etc. The calibration certificate should include all information which client requests and can explain the calibration result and methods used. [5]

The development of calibration technology for fatigue testing machine is also an epitome for the development of dynamic calibration technology of testing machine. With the development of metrology testing technology and improvement of understanding on dynamic calibration technology for

fatigue testing machine, the standardization of dynamic calibration methods for fatigue testing machine will serve as an effective guarantee for the accuracy and unification of the dynamic quantitative value of fatigue testing machine.

REFERENCES

[1] Dong Fang et al. Research on Calibration Technology of Electronic Universal Testing Machine 2014, 11: 39～43.

[2] Dong Fang and Liu Yubo et al. Multi-sensor Data Infusion Technology Based Mechanical Quality Measuring System Study 2011, 3: 64～67.

[3] Dong Fang and Jiao Yang et al. Study on Sine Dynamic Torque Data Collection System. Ship Engineering, 2012, Z1: 16～18.

[4] JJG 556-2011 Verification Regulation on Axial Force Fatigue Testing Machines. Quality Inspection of China Press, 2011

[5] ASTM 467-08 Standard Practice for Verification of Constant Amplitude Dynamic Force in an Axial Fatigue Testing System, ASTM, 2011, 12.