The Design of DSP controller based DC Servo Motor Control System

Haiyan Hu *, Hong Gu, Chunguang Li, Xiaowei Cai and Juan Li

School of Mechanical and Electric Engineering, Soochow University, Suzhou 215006, China

huhyhit@gmail.com

Keywords: DC Motor; DSP; Servo Control; Classical PID algorithm.

Abstract. The servo control technique is one of the key technologies in the field of control like robots. In order to meet the demands of servo control for robots, a DSP based DC servo motor control system was developed. Firstly, this paper promoted the design of controller and analyzed the overall structure and function of the system. Then the hardware of the system was introduced and the key components were chosen and demonstrated; the classical PID algorithm was selected as the core algorithm of servo control and the design of the system program was elaborated. Finally, an experiment was conducted on the hardware platform with software systems. The experimental result illustrated that the motor could run in high precision under the control of the system with simple structure and easy manipulation.

Introduction

In many automatic control systems, especially in fields such as medical treatment and robots, precise control of parameters like position, speed, torque and high reliability are required. Due to its characteristics of smooth speed regulation and easy control, DC Motor speed control systems are widely used in automation equipment and production departments which have high requirement on control such as CNC machine tools and industrial robots [1]. The trend of the development of the motor servo control area is the embedded control system with DSP as its core controller for its great function of input and output (I/O) and capability of high speed digital signal processing. So it is meaningful and promising to develop a servo control system of DC motor with high performance and reliability [2].

This paper developed a DC servo motor control system based on a DSP controller after analyzing the control demand of the robot in our lab and taking the experience of other researchers domestic and abroad. The system consisted of the driver and controller for the DC servo motor. The experimental results showed that the system could run with high precision and reliability in either speed mode or position mode and could keep parameters like PID parameters saved despite the loss of power.

Hardware Structure

The entire control system includes: host computer, motor driving part, parameter storage and signal sampling and processing part. The structure diagram of the system is illustrated in Fig.1. The function of the host computer is sending instructions via RS485 Bus to the controller in order to modify the parameters or run the motor; The core part of the controller is the minimum system based on a DSP chip TMS320LF2407A, which is specially developed by TI company for the application of motor[3,4]; The motor driving part is a H-bridge driving circuit made up of a driving chip(IR2184)[5] and four power MOSFETs(LR7843); a photoelectric encoder is used as the signal sampling unit which measures the speed of the motor; A data memory chip(FM24CL32) is utilized to save parameters like speed, position, accelerator and PID parameters.

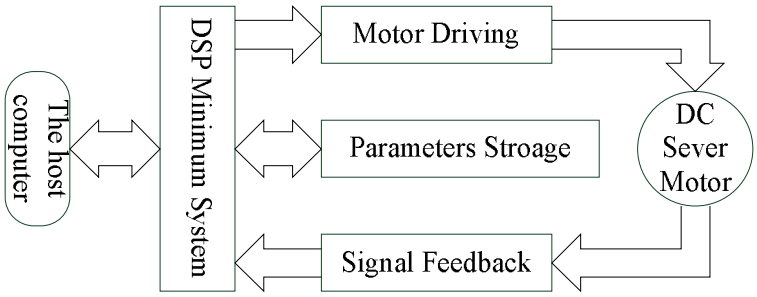

Fig.1. The Structure Diagram of the Control System

DSP minimum system and peripheral circuits. The hardware circuits are important parts of the system, based on which the software system can run normally to fulfill the control task. This part presents the circuit design of the functional modules. As is shown in Fig.2, the hardware of the system is made up of the following parts: DSP minimum system, motor driving unit, storage unit and upper host computer, and the main parts are the DSP minimum system and motor driving unit [3,4].

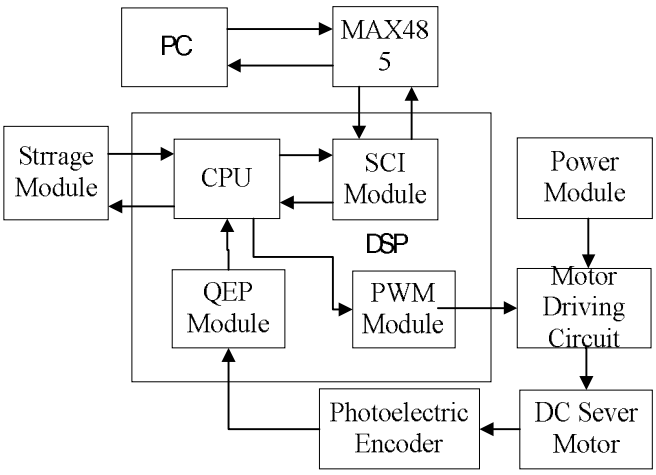

Fig.2. Overall Structure of Hardware

The DSP minimum system is the core of the control system, which generates control signals calculated according to the feedback signal and control algorithm. The circuit of minimum system includes: power supply unit, timer unit, SRAM and JTAG interface.

The peripheral circuits compromise a storage unit and a communication interface unit. A nonvolatile ferroelectric memory (FM24CL32) is used to store the parameters that system needs to run correctly. The RS485 bus is one of the widely used buses in industrial site for its mature technology and easy manipulation. So the RS485 bus is used in this system to communicate with the host PC. At the same time, the circuit of CAN bus is reserved as another way to communicate.

Motor driving circuit. The motor driving circuit is one of the most important circuits in the system, which directly determines the performance of the motor. Considering the running voltage and power of the system, a driving chip (IR2184 from IR company in America) [5] and four MOSFETs (LR7843) are used to build the driving circuit [6], as is shown in Fig.3.

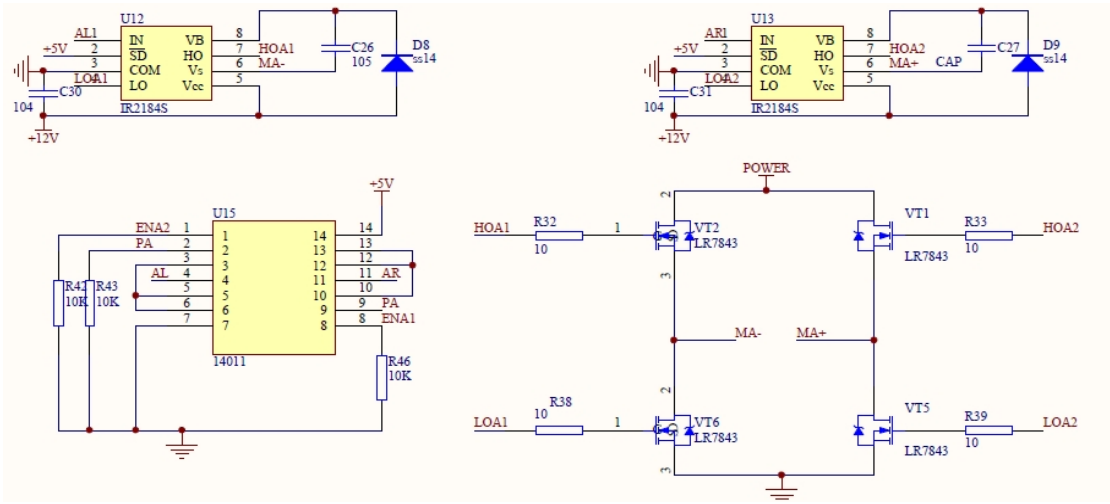

Figure.3. The Schematic of the Driving Circuit

After calculation, the DSP can generate control signals (ENA1, ENA2 and PWM) to run the motor in the desired module. The prototype of the entire controller is presented in Fig.4.

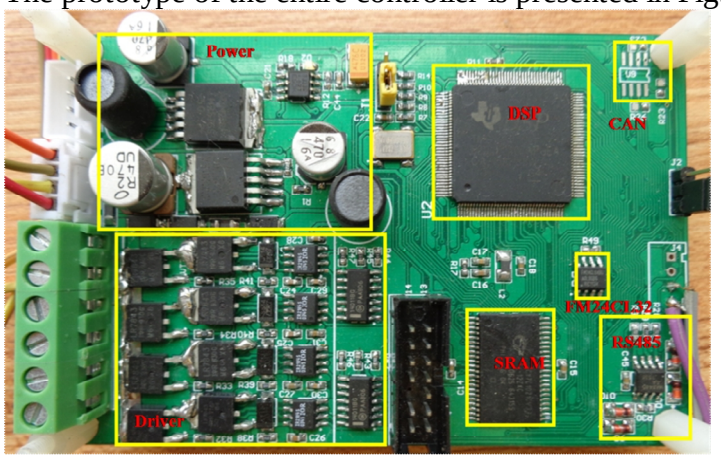

Fig.4. Prototype of the controller

Software Design

A well-performed control system has not only reliable hardware, but efficient and useful software as well. Fig.5 illustrates the closed-loop control diagram of the system. The system includes speed loop and position loop. The calculated position result is firstly converted to speed and finally changed into voltage loaded on the motor[7,8,9].

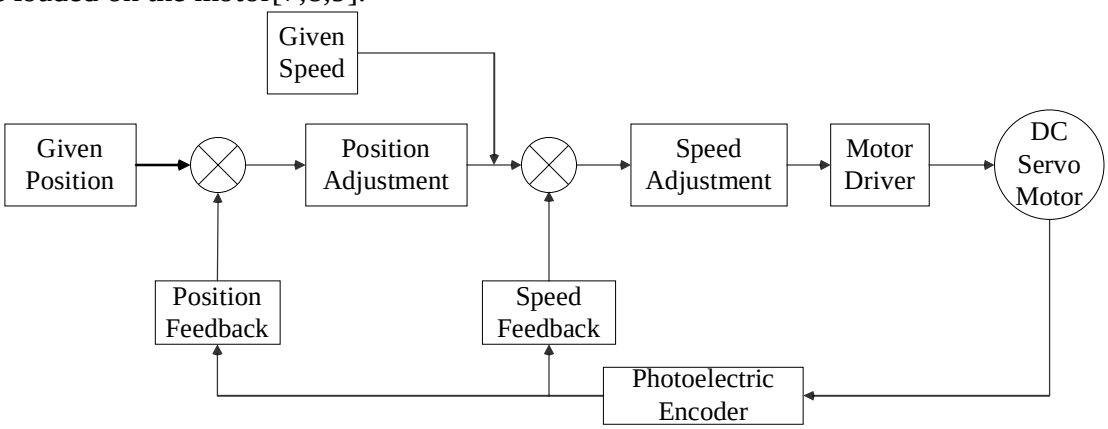

Fig.5. Closed-loop Diagram of the System

Control Algorithm. Since 1903s, the PID algorithm has experienced great development in industrial area. As is presented in Fig.6, the PID driver has a simple structure with three parameters: Proportion (P), Integration (I) and Differential (D) and the parameters are easy to change. During the long period of its usage, the technology of PID driver becomes more and more mature and accumulates a lot of experience. PID driver overcomes the shortcoming that the mathematical model of the object is hard to get and it's easy to implement this algorithm into software. So the PID algorithm is used in this control system.

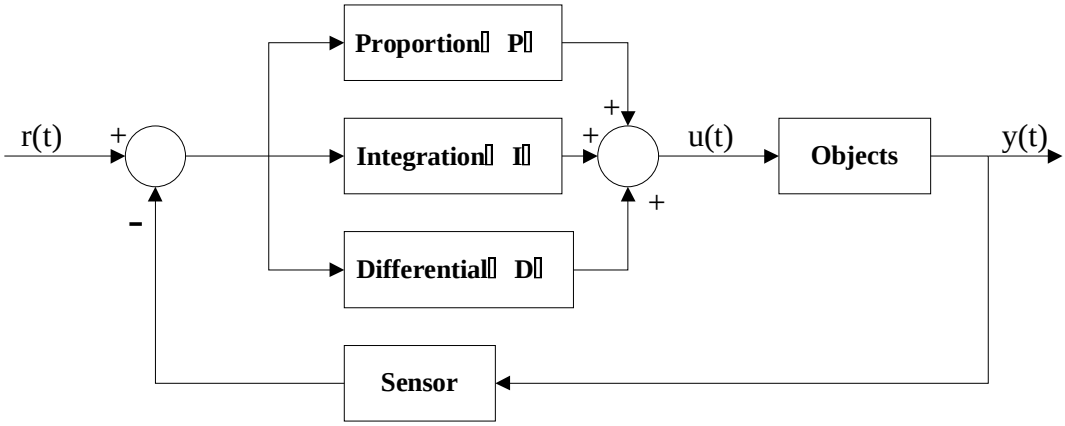

Fig.6. Diagram of the PID Driver

The Main Program. The software is designed in a modular way and the program is made up of initialization, PWM generation, QEP decoder, Timer module, IIC module and SCI module. In this way we can improve efficiency of the system and reduce the risk of failure.

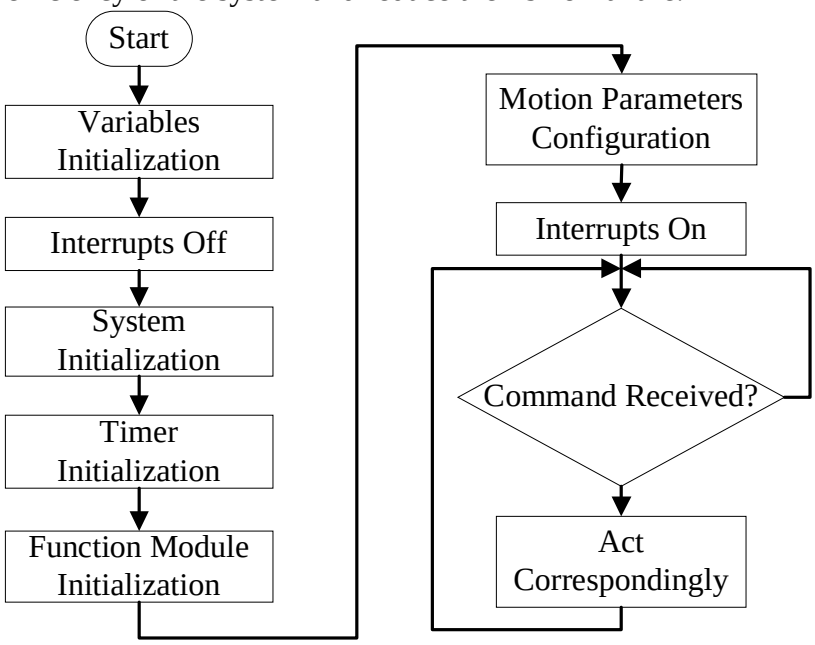

Fig.7. Flowchart of the system's main program

Fig.7 presents the flowchart of the system's main program. After initializing system parameters, global variables and function modules, the program run into a loop checking the command received flag, which is set when the message is received through RS485 bus from the upper host computer. Then the program runs correspondingly.

Servo Control Program. The servo control program is executed in the timer period interrupt program as the closed loop control function. During the servo period, the control amount is calculated according to the control algorithm and real-time system parameters and it is sent to PWM driving function to drive the motor. As is illustrated in Fig.8, there are 2 states in position mode. The first is

that, the path is relatively long and needs proceedings of acceleration, uniform and deceleration; the second is that, the path is short enough so it needs period of acceleration and deceleration.

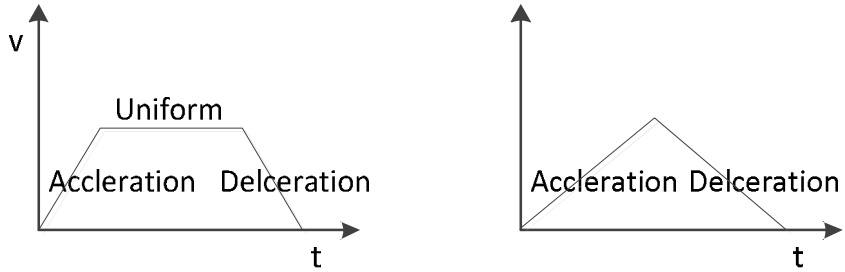

(a) period with a uniform motion (b)period without a uniform motion

Fig.8. Two states of position mode

During each servo cycle, firstly, the real speed and position are detected and the function mode is selected. Secondly, the error between the real and given speed and position is calculated and the control signal is generated to drive the motor to minimize the error. In the speed mode, the motor is accelerated and kept to the given speed.

Experiments and Results

Several experiments were conducted to verify the function of the controller. Firstly, functions of modules like DSP minimum system module, PWM module, motor driving module, communication modules were verified. Finally, the servo control experiment was made.

To verify the function of the DSP minimum system and the PWM module, a program was coded to generate the PWM wave, which could be observed by oscilloscope, as was presented in Fig.9. Then, the motor was controlled in an open-loop way and the encoder generated the quadrature encoder pulse. Fig.10 illustrates that the motor and encoder can run normally.

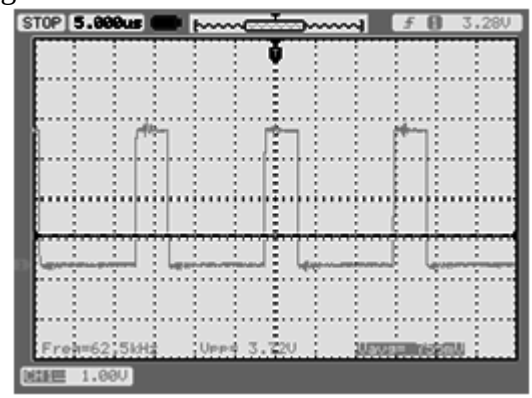

Figure 9 PWM wave

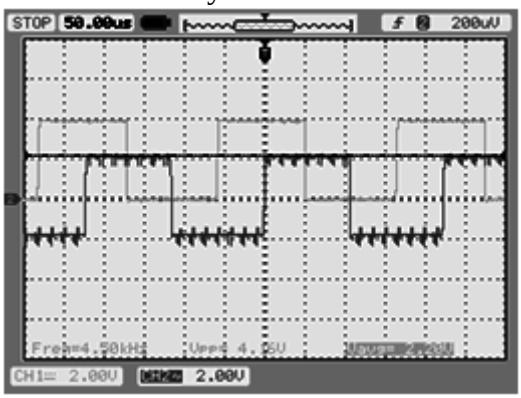

Figure 10 Pulse returned from encoder

After verifying the function of each module, a comprehensive experiment of servo control of speed and position was conducted. The results showed that when the command was received from the PC, the motor could run in the desired way. The testing of the whole system is presented in Fig.11.

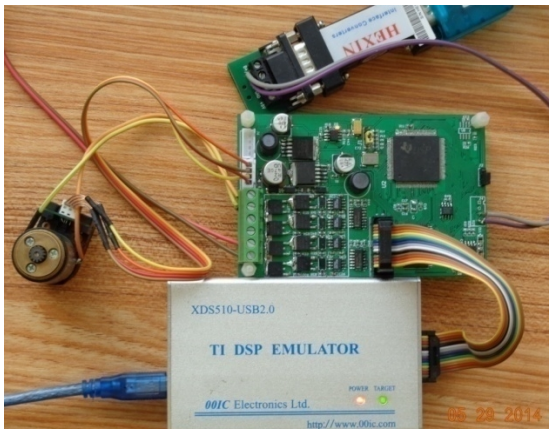

Fig.11. Testing of the Whole System

Conclusion

A DC servo motor control system based on DSP controller was designed after analyzing the control demand of the robot and referring to other researchers domestic and abroad. Both hardware and software of the controller were developed and experiments were conduct. The results showed that the controller could realize the function of DC motor servo control,meetint the demand of robot control.

Acknowledgment

This work was financially supported by the National Natural Science Foundation of China (61203349) and the Natural Science Foundation of Jiangsu Province (BK2012215).

Reference

[1]Yang Tongjie. The design of a Brushless DC Motor Servo Controller based on DSP [D]. Nanjing University of Technology and Engineering 2009

[2]Yang ChenYang, Wang ShuJing, Wang Gang. Design of a PID speed control system of DC motor based on ARM [J]. Automation & Instrumentation. 2013(01)

[3]Texas Instruments. TMS320LF2407, TMS320LF2406, TMS320LF2402 DSP Controllers

[4]Liu Hepen, Wang Weijun, Jiang Yu, Deng Li. TMS320LF240x DSP development &application based on C language.[M].Beijing：Beijing University of Aeronautics and Astronautics Press 2003.

[5]International Rectifier IR2184 (4) (S) & (PbF) Datasheet (No.PD60174 revG)

[6] International Rectifier IRLR7843, IRLU7843 Datasheet (PD94638A)

[7] Chen Boshi. The automatic control system for electric drive – Motion control system [M]. Beijing, China Machine Press, 2003

[8]Jiang XueJun, Liu Xinguo, Computer control technology（Version 2）[M].Beijing: Tsinghua University Press2009

[9]G.Sen Gupta and S.C.Mukhopadhyay: Embedded Microcontroller Interfacing, LNEE 65,pp.83-102.(Embedded Microcontroller Based DC Motor Control: A Project Based Approach)