Ball mill feeding based on fuzzy adaptive control system

Bihui Huang & Qiong Liu

College of Information Science and Engineering, Wuhan university of science and technology, Wuhan 430081, China

Keyword: ball mill, fuzzy PID control, feed rate.

Abstract: In industrial production, material level control of ball mill are normal operation of ball mill is of great significance. In view of the ball mill run time nonlinear, big inertia and strong coupling characteristic, studied a kind of fuzzy PID based on PLC - 300 ball mill feeding control algorithm, based on fuzzy reasoning to self-tuning of PID parameters, realized the automatic control of ball mill feeding, to ensure the normal operation of the ball mill. The system of ball mill is able to overcome all kinds of factors, avoid ball mill grinding "empty" or" get a belly". Through MATLAB simulation, confirmed that the system has excellent control characteristic and robustness, effectiveness and extensive applicability.

Introduction

Ball mill is a kind of key equipment for material to be broken after turning over then to smash. It is widely used in cement, new building materials, silicate products, refractory materials, fertilizer, black and nonferrous metal and glass ceramics and other production industries, it can be dry or wet grinding for a variety of ores and other grind-able materials. Ball mill applied to grind various ores and other materials, is widely used in mineral processing, building materials and chemical industry. Ball mill is a high-energy equipment. In industrial production, that the ball mill in a relatively optimal operating state has a crucial impact on the energy efficiency, at the same time, that can extend the working life of the ball mill, save the cost of production, guarantee the job security.

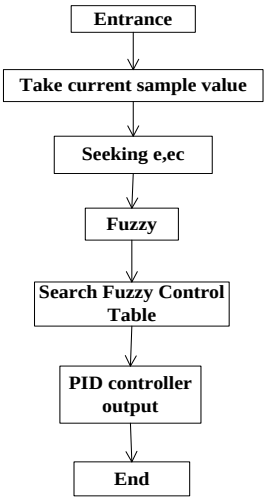

Fig.1 Fuzzy PID work flow chart

The Fuzzy PID control principle of ball mill

System design objective is to use the voice sound transmitter detects when a ball mill minerals, frequency, and intensity of the sound to determine working status of the mill. Data collected using fuzzy PID control model certain amount of control output to inverter control, changing the motor speed to the mine to achieve the mill feed control, so that it remains normal working condition. Ineffective conventional PID control, system control type Siemens S7-300 PLC. Using two input and three output mode. Fuzzy controller compares the detected power value set, according to the

error value e and error change rate ec as input control, reconciliation demerit fuzzy inference fuzzy inference operation, etc. after a control volume, change to the mine motor the speed can be adjusted to the ore, enabling the mill to the ore automatic control. The fuzzy control flow charts of the ball mill as Fig.1 shows.

The fuzzy PID control algorithm

The traditional PID, easy to use, but the ball mill control object has a non-linear, large inertia, strong coupling, etc., using conventional PID control effect is not obvious, and the traditional PID control no adaptive ability, changes some parameters when you can not effective control systems. Therefore, the use of fuzzy PID control is a good way. As used herein, is a fuzzy adaptive control, namely the use of the basic theory and method of fuzzy mathematics, the conditions of the rule, operations using fuzzy set to represent, and these fuzzy control rules and the initial PID parameters stored in the computer as a knowledge base and then by the actual response of the control system can be realized by the fuzzy inference to PID parameter tuning. Fuzzy self-tuning PID parameters is to find the fuzzy relationship with PID three parameters e and ec between running continuously detect e and ec, based on the fuzzy control theory to three parameters Kp, Ki, Kd-line modified to meet e ec is different and the control parameters of the different requirements, but the controlled object has a good dynamic and static performance. Discrete PID control algorithm:

$$u(k) = k_p e(k) + k_i T \sum_{i=0}^{k} e(j) + k_d \frac{e(k) - e(k-1)}{T} \qquad (1)$$

In the formula: k is the sampling number, T is the sampling time.

Design the fuzzy PID controller

The fuzzy PID controller structure is shown in Figure 2. The input of the controller is of the motor's power and the variation of the difference between the E and the variation rate of EC, the input of the system is u, and the power is r. The fuzzy subset of E and the deviation change rate of EC is: [-3, +3],

The EC domain is [-3, +3], E=Ec=[NB, NM, NS, ZE, PS, PM,, PB].

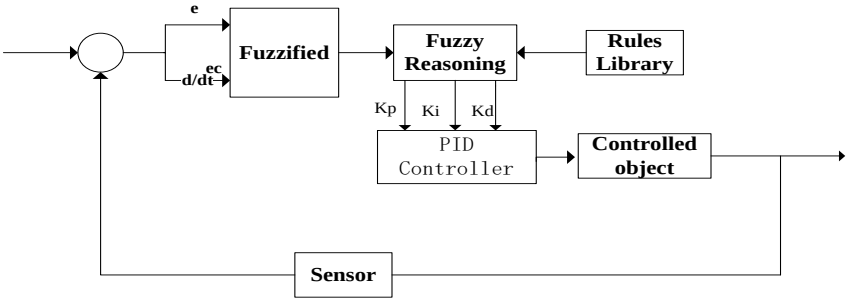

Fig.2 The structure of fuzzy PID control

The membership functions are taken from the form of trigonometric function. As shown in Figure 3 the membership function diagram.

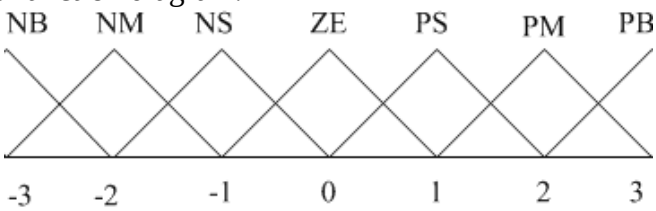

Fig.3 Membership function of the fuzzy variable values

According to the parameters Kp, Ki, Kd output characteristics of the system case, summed up in the general case, the absolute value of the deviation under different variation of the absolute value

of the deviation e ec, controlled process parameters Kp, Ki, Kd of Auto tune requires the following rules: 1 when the absolute value of e larger, in order to accelerate the response speed of the system and to avoid the initial bias instant e becomes large, it may cause differential oversaturated, leaving the control action beyond the approved scope, and should therefore be Kp to larger and smaller Kd. 2 When the absolute value of e and ec of medium size, for the system to respond to overshoot reduction should take a smaller value of Ki, Kp, Kd sub moderate, to ensure the system response speed. 3 When the absolute value of e is small, as the system has good steady state performance, it should increase the value of Kp and Ki. According to these principles tuning PID parameters and experience the usual mill site work, fuzzy rule table shown in Table 1:

Table1 Fuzzy Control Rules

u \ e / ec	NB	NM	NS	ZO	PS	PM	PB
PB	PB	PM	NM	NM	NB	NB	X
PM	PB	PM	NM	NM	NS	NS	X
PS	PB	PM	NS	NS	NS	NM	NB
ZO	PB	PM	PS	ZO	NS	NM	NB
NS	PB	PM	PS	PS	PS	NM	NB
NM	X	PB	PS	PS	PM	NM	NL
NB	X	PB	PB	PM	PM	NM	NB

Followed by the establishment of the fuzzy inference fuzzy controller fuzzy control rules after playing rule base is expert knowledge or experience long-term accumulation operator manually based on the fuzzy inference according to the rules of each parameter table. Fuzzy reasoning is as follows:

If(e is NB) and (ec is PB) then (Kp is PB)(Ki is PB)
If(e is NM) and (ec is PB) then (Kp is PB)(Ki is PB)
…
If(e is NS and (ec is NB)then (Kp is PB)(Ki is NB)
…

The membership status of different fuzzy control method using a weighted average membership determined corresponding output, which is a weighted average of the fuzzy method:

$$U(kT)=\frac{\sum_{i=1}^{n}U_i(kT)^{\mu_c}(U_i(kT))}{\sum_{i=1}^{n}\mu_c(U_i(kT))} \quad (2)$$

In the formula: $U(kT)$ is Clarity value; $U_i(kT)$ is the output of fuzzy controller; $\mu_c(U_i(kT))$ is Corresponding membership.

Fuzzy PID control realization on PLC

Ball mill control system is a combination of S7-300PLC and IPC-610 industrial control computer control structure. PC through CP5611 communication card and Profibus network to achieve data communication with PLC, through the WinCC to complete the ball mill to control the monitoring and production. The lower computer uses the master station and slave station, through the bus link. After the hardware configuration of STEP7 software, the preparation of PLC user program.

Summary

In view of the ball mill grinding process has more random interference factors and large inertia and lag, the fuzzy PID control theory is introduced into the ball mill feed control system, realizing online parameters self-tuning, self-adjusting continuous control, it can effectively feeder for automatic control of ball mill, making the ball mill in the best working condition. Practice results show that the system reliable operation, regulating speed, strong anti-jamming capability, improving the grinding efficiency, has good application value.

References

[1] Su Yi-feng, Jiao Song-Ming, Zhang Qian. A Realization Method for Fuzzy Decoupling Control System for Ball Mill. Journal of North China Electric Power University[J],2008,1.

[2] Cheng Heng. Fuzzy PID Technology Application in The Grinding System [J].Mining Machinery,2010,38(3).

[3] Zhu Jing, Sun Liu-Fang. Fuzzy Control Principle and Application [M].Beijing: China Machine Press,2001.

[4] Liu Jin-Kun. MATLAB Simulation of Advanced PID Control [M].Beijing: Electronic Industry Press,2013.

[5] Liu Han-Zhong, Guan Yuan-Hong. Adaptive Fuzzy PID Algorithm in The Application of Flow Pressure Control System[J]. Chemical Industry Automation and Instrumentation, 2001, 38.

[6] Jiang De-Xuan. Based on the Optimal Control of Grinding Ball Mill Load Testing[D].2009.

[7] Zeng Guang-Qi. Fuzzy Control Theory and Engineering Application[M].Wuhan: Huazhong University of Science and Technology Press,2006,(9).

[8] Huang Ming-Hui, Xiong Huan-Huan, Zhao Xiao-Lin, Duan Jun, Liu Xin-Liang. The Application of Fuzzy PID in Hydraulic Position Control System[J]. Control Engineering,2011,1.