An Adaptive Smith-Fuzzy PID Control Design for Steering and Speed Control System of Electric Vehicle

Xiaoliang Lv[1, a *], Guo Li[1, b] and Haixiang Liu[1, c]

[1]Automation School, University of Science and Technology Beijing, Beijing, China, 100083

[a]lv_maxwell@sina.com, [b]guo6396@sina.com, [c]1454848644@qq.com

Keywords: Electric vehicle, steering control, speed control, Smith predictor, fuzzy PID.

Abstract. This paper mainly studies the steering and speed cooperative control system of electrical vehicles, and establishes relevant mathematical model. A control approach is proposed by combining adaptive smith predictor and fuzzy PID controller. The results show that the adaptive smith-fuzzy PID controller has a better control effect than the classical PID control and fuzzy PID control, its functions complement and coordinate to provide service each other.

Introduction

As the important parts of electric vehicles, steering and speed system are the keys to determine the active safety. Because the characteristic of the mobile carrier is nonlinear time variant, the traditional PID controller can't meet the requirements of the control system, So we need a better real-time performance, stronger adaptive ability and practical controller. The research is focused on the development of a set of simple and reliable joint control system for electric vehicles. In order to control the complex control system and the high precision servo system with good control effect, we use the fuzzy PID control marked by flexible, adaptability and high precision, and on the basis of this, the adaptive Smith predictor, combine with fuzzy PID in the control system, can better eliminate the delay in the system, so as to achieve more rapid adjustment effect.

System Model

In this paper, we adopt electric vehicle possessed a front wheel steering and rear wheel for the controlled object. Simplified steering and speed models are set up based on assumptions:The whole vehicle body and the wheels are respectively considered as rigid body, which speed and the radius of turning circle are not enough large, ignore the side slip problem of the tires and influence of uneven ground to movement.

The electric vehicle steering system is approximated as the two order linear system with time delay element. Thus, the transfer function of the electric vehicle's steering model is:

$$G(s)=\frac{Ae^{-ts}}{Js^2+Bs+1}. \tag{1}$$

Inside, J is the moment of inertia, B is the friction drag coefficient, A is the gain coefficient of the steering system, t is the time delay parameter. We obtain the final steering model by experiment:

$$G(s)=\frac{25e^{-ts}}{1.8s^2+4.2s+1}. \tag{2}$$

The DC motor drive system consists of a motor driving module, a DC motor and a speed measurement module. The motor speed system is located in the driving module. The speed system is approximated as a two order linear system, and the transfer function is:

$$G(s)=\frac{K}{s(Js+B)}. \tag{3}$$

Among them, J is the moment of inertia, B is the external resistance coefficient (including wind resistance, road resistance, etc.), K is the gain coefficient of the speed system. Select RS-380SH that is the type of DC motor as the controlled object of the design system. The speed model is set to:

$$G(s)=\frac{100}{s(0.67s+10)}. \tag{4}$$

Controller Design

Fuzzy PID Controller Design. Because the steering and speed control system of electric vehicle is a complex controlled object with large inertia and time variant, so we adopt the means of fuzzy-tuning PID parameters to solve the above problems [1]. According to the different state of the carrier and the operated system, the means can auto-adjust the fuzzy PID parameters, so that the system can adapt to the changes of the controlled object. And we use NSGA-II in Fuzzy logic rules [2].

In fuzzy logic unit, the relationship between the input and output variables can be learned by observing Rule and Surface as shown in Fig. 1-Fig. 4:

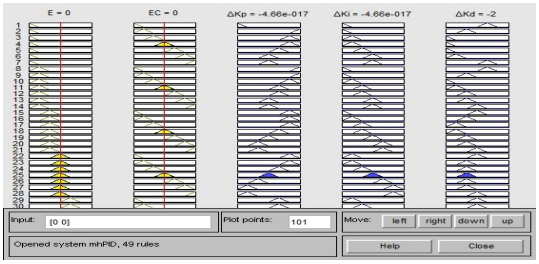

Fig. 1 Fuzzy control logic rules

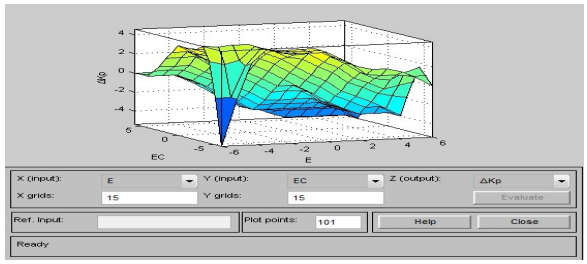

Fig. 2 Fuzzy control logic of Kp

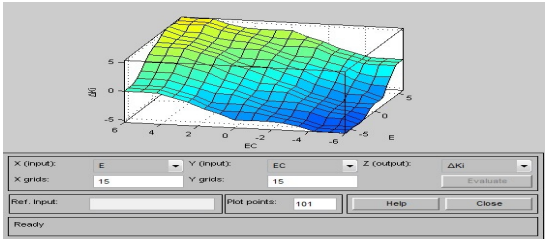

Fig. 3 Fuzzy control logic of Ki

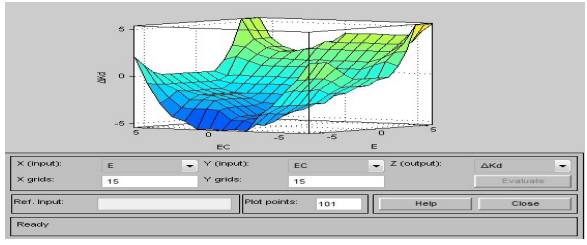

Fig. 4 Fuzzy control logic of Kd

The established fuzzy PID controller control system is shown in the Fig. 5:

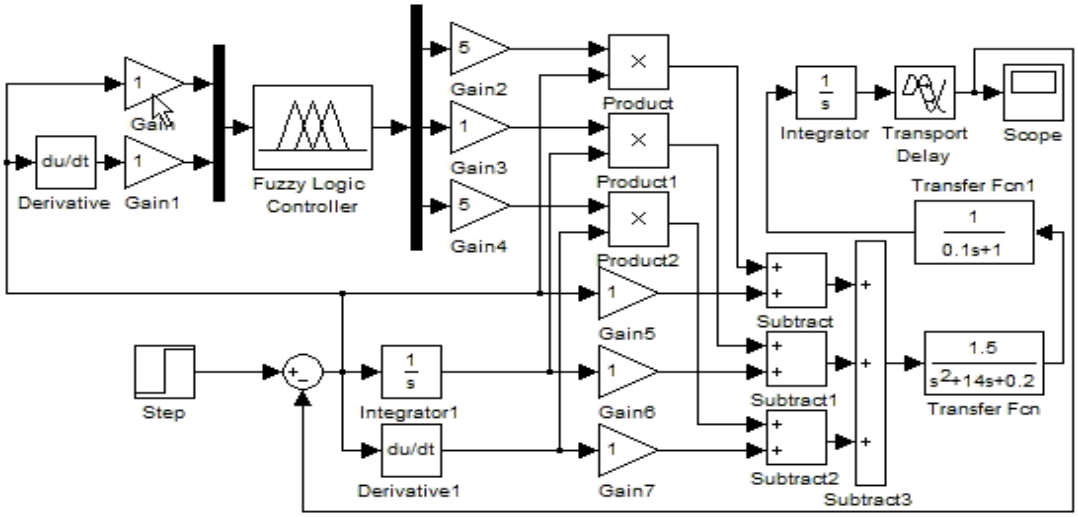

Fig. 5 Control system simulation block diagram with fuzzy PID controller

Adaptive Smith-Fuzzy PID Controller Design. The transfer function of the system controller is $W_c(s)$;the transfer function to remove the pure delay part of the controlled object is $W_p(s)$, the whole

transfer function of the controlled object is $W_p(s)e^{-ts}$, the pure delay element in the controlled object is e^{-ts}, and the transfer function of the feedback system which does not contain the Smith predictor can be expressed as Eq. 5:

$$f(s)=\frac{Y(s)}{R(s)}=\frac{W_c(s)W_p(s)e^{-ts}}{1+W_c(s)W_p(s)e^{-ts}}. \tag{5}$$

By the Eq. 5, the characteristic equation contains the pure lag phase, which can reduce the system stability. If the Smith predictor is used to estimating the system, the parameter change can be observed by the controller in advance, which can accelerate the adjustment process [3]. At this point the transfer function is:

$$f(s)=\frac{Y(s)}{R(s)}=\frac{W_c(s)W_p(s)e^{-ts}}{1+W_c(s)W_p(s)}. \tag{6}$$

In order to further reduce the effect of system delay, we build an adaptive smith-fuzzy PID controller based on the fuzzy PID controller [4], and compensate the time delay in the system by using the adaptive Smith predictor. Adaptive Smith-fuzzy PID controller established for control the system shown in Fig. 6:

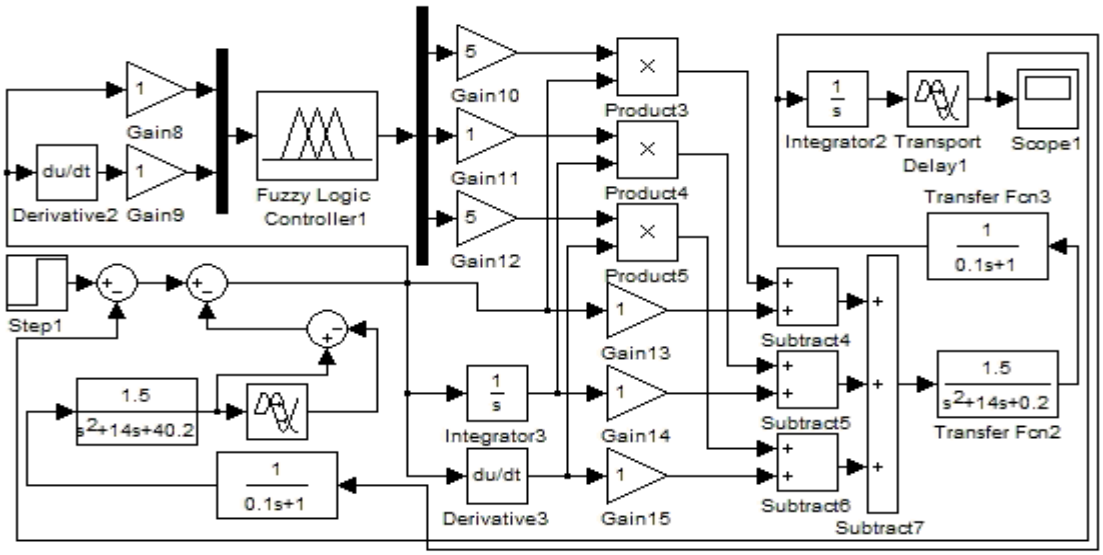

Fig. 6 Block diagram of adaptive smith-fuzzy PID control

Simulation and Analysis

Input a step signal to control system, and draw two kinds of control system curve before and after the addition of the Smith predictor. We can obtain that the former control effect for the electric car steering and speed control system is more obvious, there is a good compensation for the time delay element and settling time of the system to satisfy the basic requirements when compare the Smith-fuzzy PID controller with fuzzy PID controller from the simulation curves Fig. 7.

Then, in the control object, 20% of the disturbance is introduced, and the response curve of the Smith fuzzy PID control system is compared with that of the conventional PID control system. The Smith fuzzy PID can quickly adjust the system back to the stable state. Although the Smith fuzzy PID has a small overshoot, it has better robustness than the classical PID. As shown in Fig. 8.

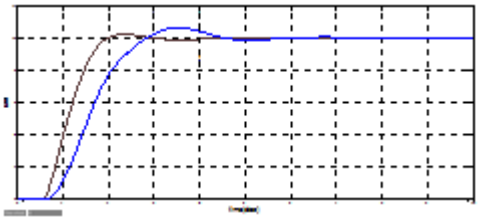

Fig. 7 simulation result figure of controller with smith-fuzzy PID and fuzzy PID

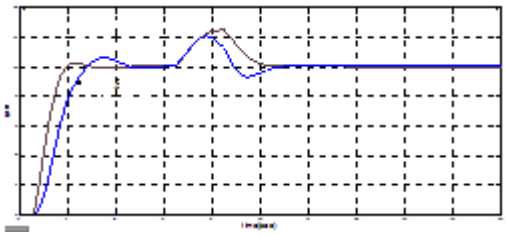

Fig. 8 Responses at 20% disturbance

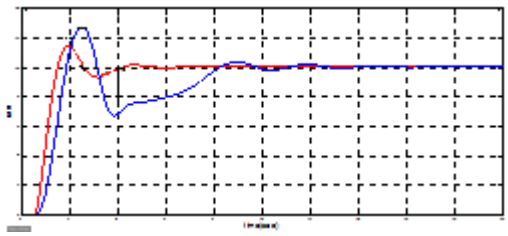

Fig. 9 Robust Performance of electric vehicle at high speed

When the car works on the highway, the main disturbance factor is the wind. When the speed of the carrier reaches to a certain value, the electric car is subject to external resistance. The transfer function can be expressed as:

$$G(s)=\frac{2.5}{0.2s^3+4s^2+23.84s+44.2}. \tag{7}$$

As we can observed from the Fig. 9, compared with the classical PID, the adaptive smith-fuzzy PID shows a better adaptation performance, the overshoot is greatly reduced, and the settling time isn't almost changed with the interference. Under the control of Smith fuzzy PID controller, the speed and steering control system of the electric vehicle has a stronger robustness to the model change caused by external disturbance.

Conclusion

The results show that the Smith-fuzzy PID has good control effect on the speed and steering control system of the electric vehicle by compare and analyze control curves of the adaptive Smith-fuzzy PID control system and the classical PID simulation. The parameters of the controller can be adjusted adaptively according to the change of the controlled object transfer function. Smith-fuzzy PID has a good robustness to the system. The system can be quickly returned to the stable state after being disturbed, it can effectively solve the problem of the cooperative control system of the mobile electric vehicle steering and speed when we adopt NSGA-II.

Acknowledgments

Supported by Fundamental Research Funds for the Central Universities 06105054

References

[1] PeiLin Wan, Lee Shan, Design and Development of A Fuzzy Controller for Electric Vehicle [C]. Beijing: China electric vehicle research and development. (2002) U469.72, In Chinese.

[2] Deb K, Pratap A, Agarwal S, etc. A Fast and Elitist Multi-objective Genetic Algorithm: NSGA-II [J]. IEEE Transactions on Evolutionary Computation. 2002, 6 (2): 182-197.

[3] Yin Cui, Research on Fuzzy PID Control Method Based on Smith Predictor [D]. Dalian: Dalian University of Technology, 2006, In Chinese.

[4] Biao Tang, Study and Application of Smith Predict Controller Based on Fuzzy PID [D]. Hunan: Central South University, 2010, In Chinese.