Analysis of Neural Network Models in Prediction of Ground Surface Settlement Around Deep Foundation Pit

Fuzhang Zhao[1, a],Chen Chen[2,b] ,and Fang Qian[3,c]

[1,2,3]College of Construction Engineering, Jilin University , Changchun, 130061, China

[a]email: zhaofz14@mails.jlu.edu.cn

[b]email: chenchen@jlu.edu.cn

[c]email:qianfang13@mails.jlu.edu.cn

Keywords:prediction of ground surfacesettlement ; deep foundation pit; PSO-BP neural network; GA-BP neural network;GRNN neural network

Abstract. During the foundation pit excavation,the prediction of ground surface settlement around deep foundation pit is directly related to the safety of the foundation pit excavation, surrounding buildings and pipelines, but the ground surface settlement of foundation pit has the characteristics of nonlinear and fuzzy. So it is necessary to monitor and predict the excavation settlement according to the excavation conditions, the surrounding environment, security level and other buildings around. Neural networkcan simulate any unknown system of complex polygene conveniently and high precision. GRNN and two improved BP neural network prediction models are established to predictsettlement in this paper. The ground surfacesettlement around a deep foundation pit is predicted with all main influential factors being taken into account properly. The three neural network prediction models—GRNN, PSO-BP and GA-BPpredictionmodel are analyzed in principle and network architecture design.And they are used to predict ground surface settlement for an engineering example in Beijing. The prediction results show that neural network have high feasibility and reliabilityin predicting ground surface settlement around deep foundation pit, and neural network will have better application prospect in the field of geotechnical in-situ testing & monitoring.

Introduction

With the rapid development of urbanization, the construction of urban underground space presents a trend of rapid development. The scale and depth of deep foundation pit engineering is increasing. The deformation control of supporting structure is more and more important to the safety of foundation pit surrounding environment, and improper control of foundation pit raises some engineering accidents and result in huge economic losses. Nearly all of the foundation pit accidents are related to the monitoring ineffective of the foundation pit or the inaccuracy of deformation prediction result from the investigation and analysis of 166 major foundation pit accidents in 37 large and medium cities in China [1].Therefore, the deformation monitoring of deep foundation is directly related to the safety of engineering construction and surrounding environment. The deformation sequence is very complex and the deformation monitoring data is nonlinear because the foundation pit deformation is influenced by multiple factors. So it is extremely important to analyze and predict the deformation of ground surface settlement around deep foundation pit by using the prediction model with strong nonlinear mapping capability.

Ghaboussi [2] and Goh [3]use neural network system to deal with the problem of rock and soil successfully.Most of the prediction models are based on the BP network , and some scholars use the radial basis network or the feedback network to build prediction model. The neural network has the characteristics of self organization, self learning,Nonlinear dynamic processing ability etc. In recent years, improved BP neural network and radial basis function neural networks like RBF model and GRNN model become more and more widely used in the process of dealing with the problem of rock and soil in the foundation pit. [4].

Actually, most of the foundation pit deformation prediction model was established based on time sequence, the neural networks model established by time series can predict the deformation of deep foundation pit accurately but it can not analyze the factors affecting the deformation. So it is

necessary to predict deformation of foundation pit construction process more effectively, and it can also analyze the main factors affecting the deformation synchronously [5,6].

Based on the above analysis, this paper use the the BP neural network improved by particle swarm optimization algorithm and genetic algorithm and a kind of radial basis function neural network-GRNN neural network model as the ground surface settlement around deep foundation pit prediction models; the influence factors of ground surface settlement are used as the input value to verify whether the models can meet the engineering requirements; three kinds of network models are compared and analyzed to testify that neural network prediction models can get high accuracy and reliabilityin predicting ground surface settlement around deep foundation pit.

Neural network models prediction principle and design

GA-BP neural network

Genetic algorithm introduces the optimized parameters for the formation of the coding series.Genetic algorithm Screens individual through the operation of Selection, crossover and mutation in accordance with the choice of fitness function.The individual who has the best fitness value is retained, and the unsuited one is eliminated.The new group inherits the information of the last generation and it’s better than the last one, this repeated cycles until reach the target.It has the characteristics of no meed for auxiliary information, efficient heuristic search, parallel computing, scalability, not easy to fall into local optimal solution and so on [8, 9].

The combination of genetic algorithm and BP algorithm(GA-BP)optimizes the weight of BP network process:first determining the initial structure of GA-BP neural network,GA-BP neural network selects structure of 7-5-1 [10]. The genetic algorithm uses the individuals in the population as initial weights and thresholds,the error of the prediction and the expected output of the training BP network is used as the fitness;the fitness function is used to measure the individual's quality and select the individual that has suitable fitness to adapt to the next generation. Genetic algorithm Screens individual through the operation of Selection, crossover and mutation,and continue to evolve to generate offspring in successive iterations until the error value reaches the goals;so it can solve the problem of initial weight optimization.The other initial parameters of GA-BP neural network are set as follows: the population size is 10, the evolution times is 100 times, the probability of mutation is 0.4, and the mutation probability is 0.2 [11, 12].

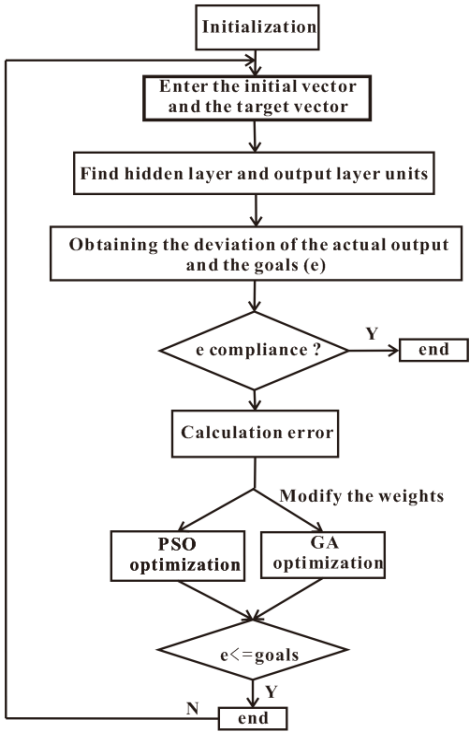

Fig.1: Improved BP neural network operation process

PSO-BP neural network

PSO-BP neural network is made up using the fast optimization method in PSO in the BP neural network. First PSO-BP neural network also selects structure of 7-5-1 for considering the contrast with GA-BP neural network [13]. And the model randomly generates the initial population of N particles in the solution space, each particle represents a potential optimal solution;the optimal location of the *i* particle search is called the individual extremum:$P_p=(P_{i1}, P_{i2}, \ldots, P_{iD})^T$ i=1,2,…,*N*; the whole particle swarm search to the optimal called for the global extreme value:$P_g=(P_{g1}, P_{g2}, \ldots, P_{gD})^T$. the particle update its velocity and position,velocity updating formula:

$$V_{id}^{k+1} = w*V_{id}^{k} + c_1 r_1 (P_{id}^{k} - X_{id}^{k}) + c_2 r_2 (P_{gl}^{k} - X_{id}^{k}) \quad (1)$$

Position updating formula:

$$X_{id}^{k+1} = X_{id}^{k} + V_{id}^{k+1}, \quad d=1,2,...,D, \quad i=1,2,...,n. \quad (2)$$

w—the inertia weight, it represents the previous particle velocity the impact of the current particle velocity,w=0.792;K—the current number of iterations; V_{id}—is the speed of particles; C_1 , C_2—acceleration factors,this paper takes $C_1=C_2=1.494$; R_1, R_2—random coefficients between [0,1];$V_{dmax}=mX_{dmax}$, $0.1 \le m \le 1.0$ (based on the model of Clerc M.[14]).The MSE of the predicted output and the desired output of the neural network is used as the fitness of the particles, the fitness value of the global optimum is less than the set value or the maximum number of iterations until the training end.The other initial parameters are: the population particle number is 2, the dimension of each particle is 2, and the number of iterations of the algorithm is 100 times. Improved BP neural network operation process are shown in the Fig. 1 .

GRNN neural network

Generalized regression neural network(GRNN) is a radial basis function change form. Compared with improved BP neural network, it has the characteristic of simple structure, fast convergence and less training samples. GRNN structure based on MATLAB toolbox is shown Fig.2

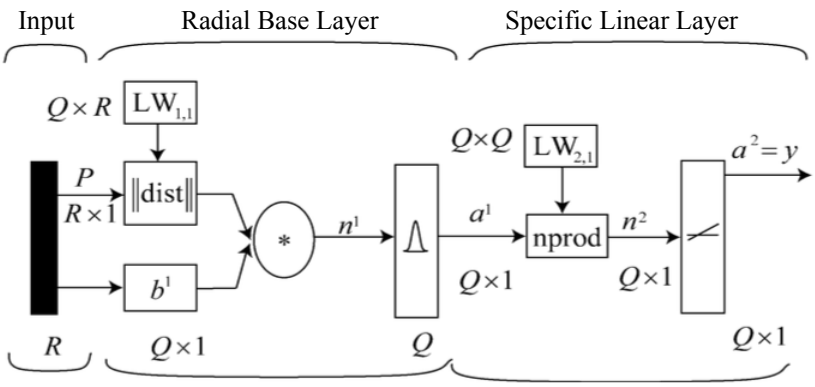

Fig. 2: GRNN network structure

GRNN model consists of 2 layers, the hidden layer is radial base layer, and the output layer is specific linear layer. The input vector is called P, NPROD is normalized point product weight function. NPROD will generate a net input N_1 according to the threshold value of the hidden layer's weight function +dist+ and the product function of B_1.And it transfers the results to the transfer function radbas, the input of the hidden layer is obtained by the following formula:

$$a_j^1 = radbas\{nprod\{+dist +_j b^1{}_j\}\} = \exp[-\frac{(n_j^1)^2}{2R_j^2}] = \exp[-\frac{(+dist +_j b^1{}_j)^2}{2R_J^2}] \quad (3)$$

R_j is called a smoothing factor, which determines the shape of the base function of the j layer.Network output is obtained by the following

$$y_k = \sum_{j=1}^{Q} LW_{kj} a_j^1 \quad (j=1,2, , ,Q), \quad (k=1,2, , ,S) \quad (4)$$

GRNN neural network also has more advantages in fitting ability and learning speed. The GRNN network can predict quickly , because it only needs to be adjusted with only one parameter-smoothing factor-R_j. R_j selects 0.7 according to the GRNN prediction model proposed by SHI Feng (2010) [15].

Analysis and parameters selection of settlement prediction models

The Analysis of the factors affecting the ground surface settlement around deep foundation pit is as follows:

(1) Supporting structure property: The Supporting structure parameters affecting settlement mainly include:The size and type of supporting structure (thickness, depth of concrete diaphragm wall),internal bracing (anchor) structure design parameter, support (anchor) layer;according to the engineering example,the supporting structure is made of concrete diaphragm wall and anchor;all parameters of the diaphragm wall change small,the concrete strength of the wall is C30, the wall thickness is 800mm, and the height is 18~24m;different parameters of anchors are designed to support the wall depend on different strata,most of them are 2~4 layers.

(2) Engineering geological and hydrogeological conditions: The parameters affecting soil pressure mainly include severe γ,cohesive force C and internal friction angle of soil mass.The variation of groundwater level is also the main factor affecting the deformation of deep foundation pit which mainly include the groundwater level W_h and the permeability K of the soil in two aspects.Although it needs artificial precipitation during the excavation of foundation pit, there is a great influence on the deformation of foundation pit when there is water source or heavy precipitation or other reasons cause the water level change,and its variation is often not regular, so the groundwater level and soil permeability coefficient should be considered as important factors.

(3) Other influencing factors: Including the monitoring points depth，the depth of excavation, soil creep or overloading, etc.

Based on the above analysis, determining the neural network input parameters for foundation pit excavation are underground water table depth (W), the weighted average values of severe(γ),the weighted average values of cohesion force(C),the weighted average values of the internal friction angle(φ) , the soil permeability coefficient (K), foundation pit excavation depth(H), supporting structure layer (N).

$$C = \frac{\sum C_i \cdot h_i}{H}; \quad \varphi = \frac{\sum \varphi_i \cdot h_i}{H}; \quad K = \frac{\sum K_i \cdot h_i}{H} \quad (5)$$

In the formula, C_i , φ_i , K_i respectively represent cohesive force, internal friction angle and permeability coefficient of each layer of soil; h_i represents the thickness of each layer of soil. GRNN, PSO-BP and GA-BP network models using the same network structure as shown in Fig. 3 .

Engineering examples

Based on the neural network model mentioned above, the ground surface settlement around deep foundation pit in Beijing is predicted. Most of the slot use diaphragm wall and prestressed anchor supporting system.The layer is mainly composed of artificial soil, cohesive soil, silt and sand.The groundwater is mainly phreatic water (including perched water), the highest level in history up to the natural ground elevation.At the same time, the other constructions surrounding, roads and underground pipelines are complex.

In this examples, the prediction models are established based on the settlement monitoring data for a section of diaphragm wall from October.1th.2013 to June.5th.2014. Monitoring data from April.5th.2014 to June.5th. 2014 are selected as validation data shown in table 1. The comparative analysis between the prediction values of three kinds of network models and the measured value is shownin fig. 4.

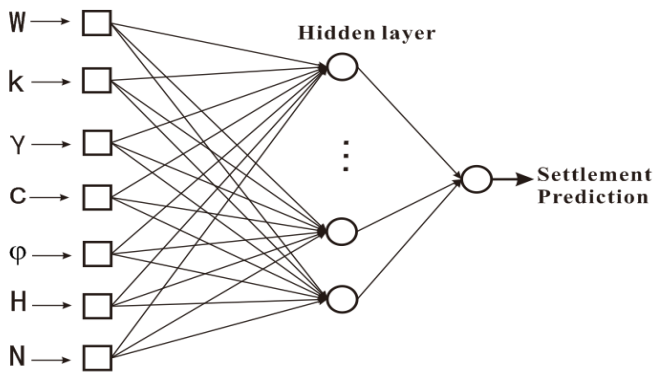

Fig. 3: The structure of neural network prediction models

Table 1 : The prediction results of the three kinds of neural network models

Monitoring date	Monitoring value/mm	GA-BP Model		PSO-BP Model		GRNNModel	
		Predictive value	Prediction error /%	Predictive value	Prediction error /%	Predictive value	Prediction error /%
2014/4/5	8.16	7.33	-10.17	8.32	1.96	7.62	-6.62
2014/4/10	9.21	7.87	-14.55	8.47	-8.03	8.43	-8.47
2014/4/15	9.10	10.34	13.63	9.73	6.92	10.12	11.21
2014/4/20	10.22	9.48	-7.24	10.13	-0.89	10.53	3.03
2014/4/25	11.57	11.92	3.03	10.42	-9.94	10.95	-5.36
2014/4/30	12.18	10.83	-11.08	11.65	-4.35	12.54	2.96
2014/5/5	13.32	11.45	-14.04	12.41	-6.83	13.02	-2.25
2014/5/10	13.84	14.56	5.20	13.57	-0.95	12.49	-9.75
2014/5/15	14.31	15.24	6.50	14.95	4.12	13.87	-3.07
2014/5/20	14.56	13.48	-7.42	15.36	5.49	14.18	-2.61
2014/5/25	15.54	14.59	-6.11	14.85	-4.44	14.92	-3.99
2014/5/30	15.32	15.94	4.05	14.36	-6.27	15.63	2.02
2014/6/5	15.97	14.68	8.08	15.29	-4.26	16.68	4.45
MRE/%			8.55		4.96		5.07

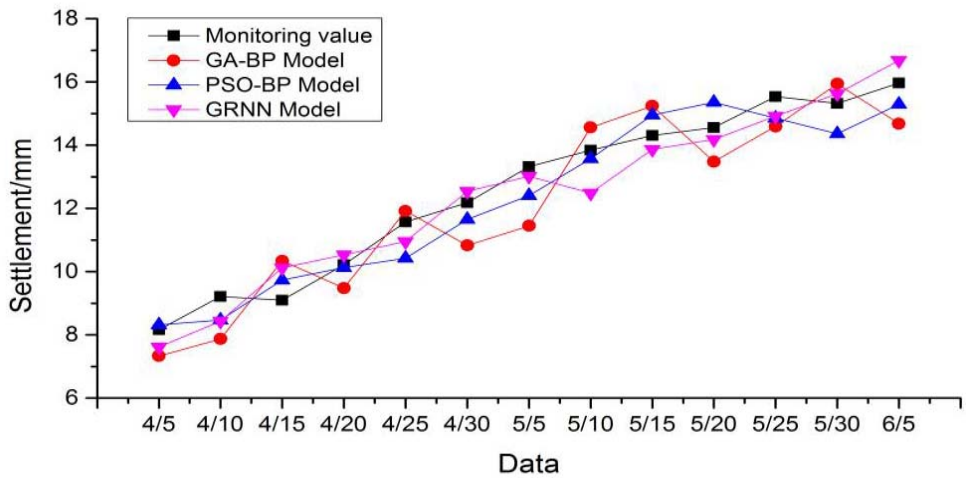

Fig 4: The settlement prediction of three kinds of network models

According to table 1, Fig 4 , it can be calculated Mean Relative Error: MRE= $1/n\sum_{i=1}^{n}\left|(y_i - y_i^*)/y_i\right|\times 100\ \%$, the relative error range of GA-BP network model is 3.03% ~ 14.04%, and

the MRE is 8.55%;the relative error range of PSO-BP and GRNN network is 0.89% ~ 8.03%, 2.02% ~ 11.21%, and the MRE are respectively 4.96% and 5.07% .So that the predictive values of PSO-BP and GRNN network model are closer to the measured values than GA-BP model, and they have smaller error fluctuations. But according to the prediction result analysis,the three models all can reach the prediction requirements.

According to fig. 4, it can be seen that the error curve of PSO-BP is more stable, and the fluctuation of the error is the least; the accuracy is higher than the other two models.

Conclusion and future research

1. In order to analyze the main factors resulting in the ground surface settlement around deep foundation pit, GRNN, PSO-BP and GA-BP neural network models use thefactors which mainly influencing ground surface settlementas the input vector.The high accuracy of prediction illustrate the choice of influencing factors is fairlyreasonable.The prediction results can reveal the essential law of ground surface settlement. So the main factors affecting the deformation can be calculated according to the change of input vectors, and it is able to guide the prediction and control of ground surface settlement .

2. Based on the analysis of the actual monitoring values and the prediction results ,it can be found that he predicted results of PSO-BP and GRNN model have high accuracy and good fault tolerance.Through the comparison analysis, the prediction accuracy of PSO-BP and GRNN model are higher than GA-BP model in the ground surface settlement around deep foundation pit. And the average prediction error is about 5%. Moreover, the stability of the PSO-BP model is higher than other two models.

3. The prediction accuracy of GRNN, GA-BP model and PSO-BP model can both meet the engineering needs, simplify the network structure and reduce the training time. Neural network models can be achieved through MATLAB programming with less time spending in the deformation control of complex foundation pit.

4. The factors that affect the ground surface settlement around deep foundation pit are complicated, in this paper, the neural network model is only demonstrated by the engineering examples in Beijing area, but it is also need to be studied the applicability in different regions and different geological conditions.

Acknowledgements

Thanks to Professor Chen Chen's guidance and amendment to the article. This work was supported by College of Construction Engineering of Jilin University and Beijing Geo-engineering Company in technology and finance.

References

[1] Lin Ming, Xu Wei. Construction technology of deep foundation pit engineering [M]. Beijing: China ,Architecture & Building Press, 2006 .(in Chinese)

[2] J.Ghaboussi, D. E. Sidasta, P.V. Lade. Neural Networks Based modeling in Geomechanics，Computer Methods and Advances in Geotechnics[M].Sirimavdane &Zaman.USA, 1994.

[3] Goh A. T. C, Wong K.S. and Broms B.B. Can Geotech, Vol. 32(1995), p.1059－1064.

[4] ZHAO Baosheng.Engineering quality,Vol.32(2014), p.8-12. (in Chinese)

[5] Chuansheng Huang. Central South University degree thesis(2011). (in Chinese)

[6] Xu Bingwei. Tianjin University degree thesis(2006). (in Chinese)

[7] Jan J C, Hung Shih-lin, Asce M, Chi S Y, Chern J C. Journal of Computing in Civil Engineering,

Vol. 16(2002), p.59-65.
[8] Wang yu.Chinese Journal of Geotechnical Engineering,Vol. 34(2012), p.168-171.(in Chinese)
[9] XIE Xiu-dong, FANG Jian-guo, LI Zhi-gao.Chinese Journal of Geotechnical Engineering, Vol. 28(2008), p.1422–1424 .(in Chinese)
[10] SHAN Yongzhi, YIN Jian, XU Hechuan, et al. Journal of Ballistics, Vol. 24(2012), p.56−57.(in Chinese)
[11] Amina M,Panagou E Z,Kodogiannis V S,etal.Chemometrics and InteLligent Laboratory Systems, Vol.103(2010), p.170-183.
[12] WEN Jiwei, CHEN Chen. Metal Mine, Vol.2012(2012): p.21−26. (in Chinese)
[13] Wu Junxue. Science Technology and Engineering, Vol.10(2010), p.6047-6049. (in Chinese)
[14] Clerc M. Proc. 1999 Congress on Evolutionary Computation, Washington, DC,p.1951-1957. Piscataway, NJ: IEEE Service Center.
[15] SHI Feng, WANG Xiaochuan, YU Lei, et al. MATLAB neural network analysis of 30 cases[M]. Beijing: Beijing Aeronautics and Astronautics Press(2010), p.1−18, 2010.(in Chinese)
[17] Kung Gordon T C, Hsiao Evan C L, Schuster Matt ,et al. Computers andGeotechnics,Vol.34 (2007), p. 385- 396.