A Study on the Strengthening Reconstruction Plans of Hyperbolic Arch Bridge

Yuhong. He*, Huimin. Hao
Puyang Vocational and Technical College,
Henan 457000,
China
pyheyuhong@126.com

***Abstract*—The paper takes double curved arch bridge as the research object, including three kinds of strengthening reconstruction plans that changed the architecture form of the hyperbolic arch bridge. Using finite analysis software MIDAS/CIVIL to establish the finite element model of three kinds of reconstruction plan and the original bridge. Compared and analyzed the deformation and stress distribution under the effect of load in different reconstruction scheme of the bridge structure. According to the clear comparison and the analysis by the result of the calculation, the difficulty of construction, engineering cost and other aspects of the three reconstruction method, We put forward suitable hyperbolic arch bridge reconstruction method.**

Keywords—hyperbolic arch bridge; finite element model; spandrel construction; deformation

I. INTRODUCTION

The double arch bridge is unique in China with the breath and characteristics. It has the advantages of novel structure, beautiful shape and light weight, low cost, convenient construction and another advantage, and it is the preferred bridge of the road bridge, and the pedestrian bridge in China and many constructions are constructed among the 1960s to the early 70s. The construction of double arch bridge improved the condition of urban and rural traffic, played an indelible role to the prosperity, development of rural and urban.

Due to the design load was low at that time, coupled with double arch composed of arch rib, two way curved arch tile, arch board and horizontal linkages in a certain order, and the combination of rib and, plate surface is too small, the stress complex, cause a lot of double arch bridge in operation appeared different degree of disease after several years, it has been difficult to adapt to the increasing traffic demand [1]. At present, the bridge maintenance, reinforcement technology has become an important topic [2-6] in the field of transportation research in worldwide. Therefore, to carry out the study of hyperbolic arch bridge reinforcement or the reconstruction technology, not only can eliminate old bridge safety hidden dangers to ensure the safety of people's life and property, but also can make the better service for the modern transportation, in addition It can bring large economic and social benefits to the local government. But in the transforming process, how to use the old bridge, and how to design a set of suitable bridge reconstruction plan price is a proposition which is worthy of studying and discussion [7].

Sanxing Bridge as the research object, this paper hyperbolic arch bridge developed three sets of reinforcement scheme, analyzed of its structure with finite element software performance, and considered different scheme construction method, economy, finally chose a suitable plan. This study can provide a reference for the design and construction of other hyperbolic arch bridge strengthening.

II. PROJECT OVERVIEW

Sanxing Bridge was founded in 1976. It is a double bridge with an empty stomach. The whole bridge has 5 ribs and 4 waves on the transverse direction and eight abdomen arch on the length direction. Both arch board and abdomen arch rib plate were precasted by concrete. It was 26 meters, 38 miles in length and bridge width was 9 meters, entirely 10 meters wide, design load was steam - 15.

After 30 years of operation, especially the serious overload using caused the bridge appears definite diseases. By investigation, the arch bridge plate, arch rib and abutment of the three main arch rings are in good condition. The main diseases are the following: the bridge jump car, bridge deck was damaged so badly that pits have been formed, curved plate has cracked slightly, the concrete cover at the bottom of the curved plate has peeled off, etc. It can be seen that the main arch ring structure is in good condition of the double arch bridge, the basic diseases are mainly concentrated on the arch construction part.

A. Empennage Unsteady Dynamics

On calculation for supersonic unsteady dynamics, the piston theory is used widely. (1) illustrates the one-order piston theory:

$$p / p_{\infty} = 1 + kv'_z / c_{\infty} \tag{1}$$

Where, p is the local pressure, p_∞ is the inflow pressure, k is the specific heat ratio, c_∞ is the sound velocity of inflow, and v_z' is the normal velocity of empennage surface flow.

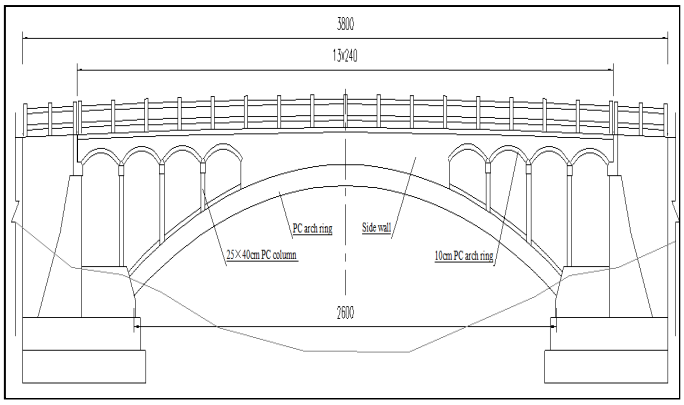

Fig. 1. The vertical view of Sanxing Bridge.

III. The Comparison and Analysis of Rebuilding Scheme

A. Summary of Different Rebuilding Scheme

The main arch ring of the bridge is still good. It can be used after the reinforcement or the reconstruction for buildings on the arch. There are three main categories on the method for buildings on the arch: first, reinforce the buildings on the arch construction; second, change the form of arch construction; third, replace material on packing the arch to reduce the weight of the main arch ring. Directed against diseases, Bridge reinforcement method is commonly used in combination with the engineering, using the "change the arch form" of construction, designed the corresponding reconstruction reinforcement scheme. According to the three kinds of changing the arch form of constructions: 1) Change the arch on building for beam arch construction; 2) change the arch on building for continuous slab arch construction; 3) change the arch on the arch buildings for frame structure buildings. Bridge elevation view and cross section view after reforming the redevelopment of the strengthening methods are shown in the Fig. 2 - 4.

B. The Analysis of Mechanical Properties Performance

MIDAS/Civil software was adopted to construct Sanxing Bridge three-dimensional finite element models. The main components are: Main arch rib, abdomen arch ring, pillar, cross beam, arch wave, and bridge panel. The whole bridge was discrete for a total of 1086 elements and 1006 nodes. Different solutions corresponding finite element model is as shown in Fig. 4. Computational load mainly consider three aspects: dead load, including the main bridge weight, bridge deck pavement load, motor load (load standard for highway secondary load).

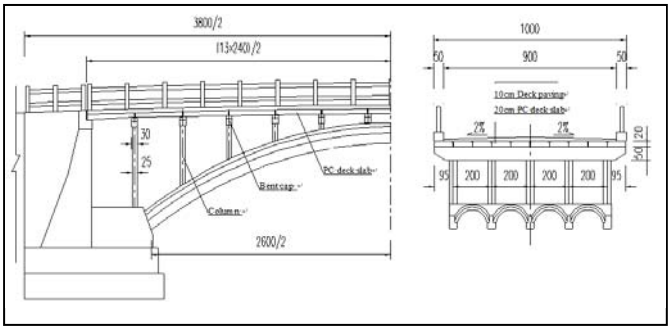

Fig. 2. Instead of beam arch construction.

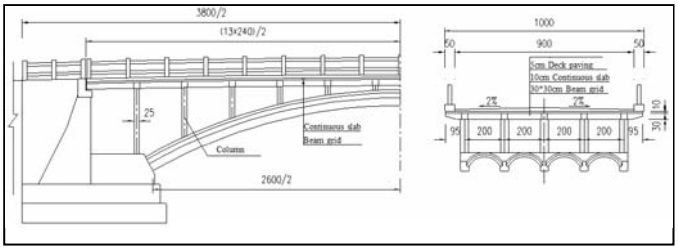

Fig. 3. Instead of continuous slab arch construction.

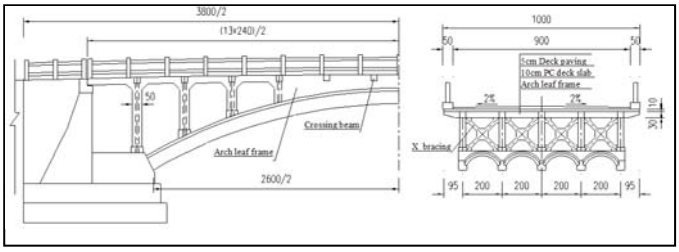

Fig. 4. Instead of rigid frame arch construction.

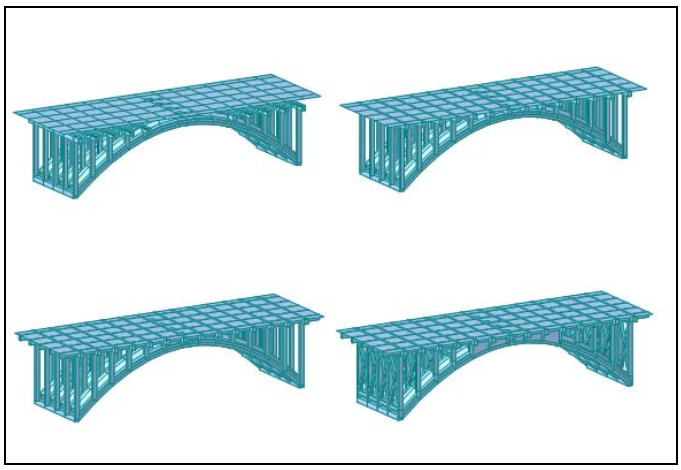

Fig. 5. Hyperbolic arch bridge finite element model.

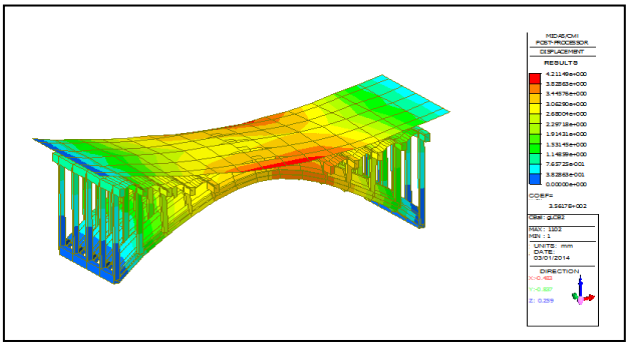

Fig. 6. The original bridge deformation under loads.

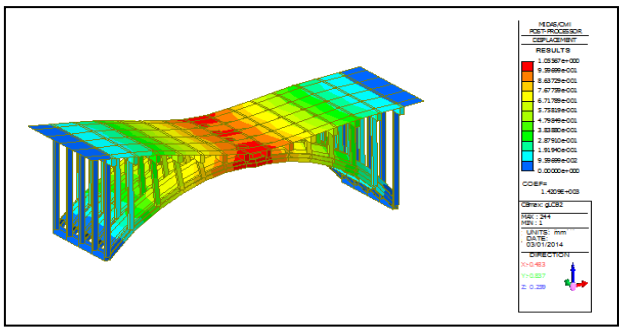

Fig. 7. The beam arch building deformation figure hyperbolic arch bridge under loads.

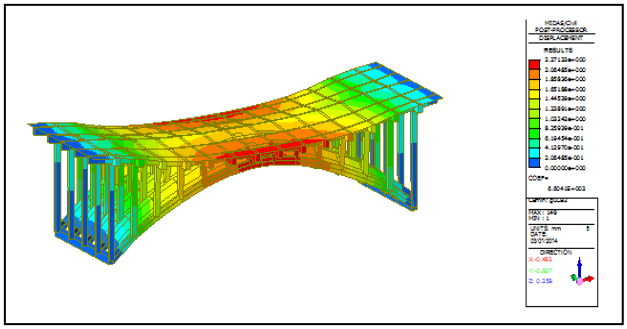

Fig. 8. Continuous slab arch bridge construction hyperbolic arch deformation figure.

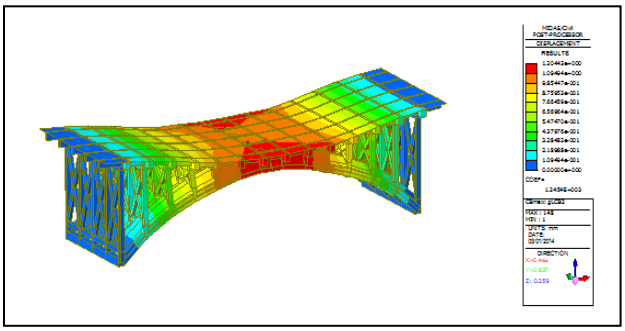

Fig. 9. Rigid frame arch bridge construction hyperbolic arch deformation figure..

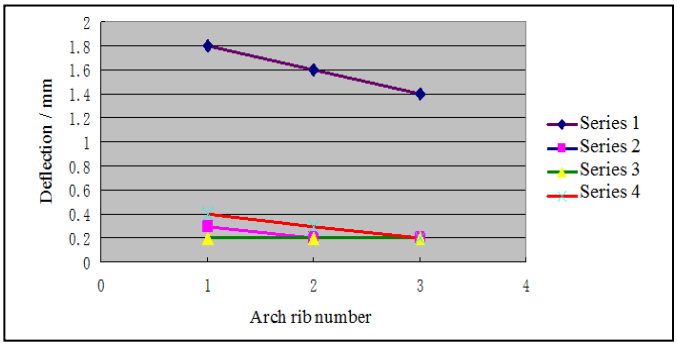

Fig. 10. Loads the biggest deflection comparison chart.

From four different arch bridge constructions of hyperbolic arch deformation calculation results, the three construction improvement plans on the arch can reduce the deflection value of original bridge under the loads. This shows that after reconstruction, the ability of the arch bridge to resist deformation increased, the whole stiffness of structure increased. On the one hand, the three reconstruction schemes on the arch building have all reduced the weight of the structure by reducing the packing weight of original arch bridge construction; On the other hand, the new improvement plan enhanced the overall stiffness of the construction on the arch. Thus, the deformation of three improvement plans under the load is smaller than the original bridge.

From the structure system to say, three kinds of rebuilding schemes are all renovation of building on the arch, the main bearing component of arch bridge is the main arch ring of the original bridge. Structure systems between beam arch on the construction and continuous plate arch construction are nearly identical, which are all the beam system which mainly transmit the load by the beam.

Concluded from the above comparison, at the perspective of deformation, rigid frame arch on the architectural form did even better when compared with the other two kinds of reconstruction way, with high resistance to deformation ability, larger structural stiffness, and good stability.

Stress comparison results show that the three kinds of rebuilding scheme are effectively reducing the stress level of the original bridge. The stress level of beam arch building and continuous plate arch construction is closed under the action of dead load, and the stress value of rigid frame arch on the building is relatively bigger. This illustration of third reconstruction scheme of the dead load is bigger than the previous ones, the ability of reduce the dead load of the original bridge is relatively lower than the previous two improvement plan.

Based on the comparative analysis results, Building on rigid frame arch has good ability to resistance deformation, stiffness is big overall; compared from the aspects of the main arch ring internal stress, the gap between three methods is not obvious, they all have good ability to minimize the main arch ring internal force, stress.

TABLE I. THE MIDDLE OF THE ARCH RIB STRESS CONTRAST UNIT ON ALL BRIDGE UNDER THE INFLUENCE OF LOAD Mpa

		The original bridge	Beam ventral holes	Continuous beam ventral holes	Rigid frame ventral holes
The arch foot section	The maximum	-14.50	-8.49	-3.95	-9.21
	On the edge	-14.50	-8.48	-3.95	-9.21
	Lower edge	-5.95	-2.08	-1.53	-2.40
L/4 section	The maximum	-2.43	-1.34	-0.70	-1.45
	On the edge	-2.43	-1.11	-0.70	-1.29
	Lower edge	-2.10	-1.34	-0.39	-1.45
Arch section	The maximum	-2.27	-1.03	-0.46	-1.44
	On the edge	-1.94	-0.84	-0.46	-1.28
	Lower edge	-2.27	-1.03	-0.09	-1.44

IV. THE ANALYSIS AND COMPARISON OF CONSTRUCTION METHOD AND PROJECT COST

A. The Difficulty of the Construction Method

The difference on the construction between building on the beam arch and continuous plate arch construction is not big. The first is to remove the deck, pack on the arch, set up post on side wall, abdomen arch, arch and abdomen arch; then drilling on the original column base, the original post position, reinforce the vertical steel bar anchorage pillar, then column reinforcement assembling, casting; After post pouring, strength reaches the design value, pour cap beam and longitudinal beam in the template, finally pour bridge panel, the construction method is simple, the craft is mature.

Building on the rigid frame arch is different from the former two kinds, the first is to remove all the arch construction, keep the main arch ring. Then drilling on the original column base, the original post position, reinforce the vertical steel bar anchorage pillar, then casting on frame steel tie. Through the implanted steel on the post office, rigid frame piece connects with Solid web section and the main arch ring. And precast X bracing at the same time.

B. The Project Cost, Structure Appearance, Maintenance

From the structure form, the three kinds of improvement plan: Building on the beam arch and Continuous plate arch construction are mainly the beam column structural system, but the construction of the arch on continuous rigid frame arch building are frame system, higher cost. Therefore, beam arch on the construction and continuous slab arch on the architectural form is more economic.

The double arch bridges after reconstruction are the mechanism system combined with arch and beam, which are all very beautiful. For the maintenance of the structure, due to the joint of the rigid frame arch on the architectural form is weak. And the connection point is more, the maintenance on the building of beam arch is difficult than the continuous plate arch construction.

V. CONCLUSIONS

Based on the results of the analysis, the double arch bridge described in this article is suitable for the method of changing the structure to reinforce it. Reconstruction scheme is recommended for beam arch on the construction. Firstly, the two scheme can effectively reduce the self-respect of double-curvature arch bridge, reduce the main arch ring of the internal force stress, and improve the bearing capacity of the main arch ring; Secondly, construction method of these two plans is simple, the craft is mature, and the appearance is very beautiful and it is easy to maintain.

The paper compared three results, which are the analysis of reinforcement method of arch reinforcement, put forward the reasonable building scheme of the double arch bridge, provide a reference for other double arch bridge reinforcement. But the level is limited, there are still many contents can be deepen in the research of the paper, without considering the role of temperature load, only simulated with finite element software, no load test and so on.

REFERENCES

[1] K.P. Zhang, Y.L. Jiang, and X.F. Zeng, “Development and outlook of bridge reinforcement.” Highway, vol. 8, pp. 299-301, 2005.

[2] R.S. Shen, The complete set of reinforcement and reconstruction technology about the hyperbolic arch bridge, China communication press. 2009.

[3] Y.H. Lv, J.Z. Shi, and Z. Jiang, “The study of reinforcement method about the hyperbolic arch bridge.”. Technol. Highway Transport, vol. 4, pp. 117- 118. 2005.

[4] S.C. Li, The structure Calculation and analysis research of the trussed combination the arch bridge Strengthened with “releasing method”, Chongqing Jia tong University. 2010.

[5] W.S. Ding, A. Tian, and Z. Liu, “The design analysis of hyperbolic arch bridge strengthened with Prestressed steel arch.” Highway Traffic Sci. Technol., vol. 21, no. 12, pp. 58-61. 2004.

[6] M.Q. Wang, L. Wang, and H. Zhang, “The finite element analysis and experimental research on an empty stomach type hyperbolic arch bridge.” J. Wuhan U. : Inform. Syst., vol. 38, no. 5, pp. 88-93, 2006.

[7] J.J. Fang, “The construction experience about two-way curved arch bridge.” China Civil Eng. J., vol. S4, pp. 56- 58, 1966.