Experimental Research on NH_3-SCR Performance of Mn-Ce/TiO_2 Catalyst

Guoyou Xu, Yating Wang, Yue Yang, Yang Fu, Xiang Gou[a], Jinxiang Wu

School of Energy and Environmental Engineering, Hebei University of Technology, Tianjin 300401, China

[a]Corresponding author email: gouxiang@sina.com

Keywords: SCR; NH_3-NO ratio; Mn; Ce; CO_2 atmosphere

Abstract. NO_X pollutions affect our social manufacture and human being living, which has caused the extensive attention. NH_3-SCR (selective catalytic reduction) has been largely studied to reduce NO_X pollution. Most people focus on catalysts under N_2 and inert gases atmosphere, while few people research on the study of CO_2 as balance gas on oxy-fuel combustion condition. In this work, TiO_2 served as Mn- and Ce- support. The experiments were performed under CO_2 and N_2 atmosphere respectively. The results showed that CO_2 could inhibit NO conversion. The molar ratio of NH_3 to NO at 1.2:1 obtained a better NO conversion with Mn-Ce/TiO_2 catalyst.

Introduction

With the fast increasing economy, the environment problems also become serious than before[1]. NOx is one of the most serious pollutants, which has a bad impact on human being living environment. Not only has the environment been damaged by NOx, but also has a badly harm to human health. Urban smog, acid rain, ozone-depleting are all caused by excessive NOx emissions[2], which needs to be limited to a certain level as soon as possible that does not put the environment in danger. As power plants are mainly responsible for the excessive NOx emissions, appropriate measures should be taken to reduce them. SCR or NH_3-SCR (Selective catalytic reduction of NOx with NH_3) is the most popular method to solve excessive NOx emissions problem[3][4].

Most people focus on catalysts under N_2 and inert gases atmosphere，Yu et al. [5] studyed on Mn-Ce-CO/TiO_2 (N_2 as balanced gas) and have found TiO_2 supports Mn-Ce-Co metal had pretty good performance of DeNOx. However, oxy-fuel combustion will be the future combustion method, which would generate almost CO_2 and none N_2 in the exhausted gas. With this trend, it is important to research on CO_2 atmosphere. But, little work of NH_3-SCR have been done under CO_2 atmosphere. Gou et al. [6] have worked on Mn-Ce/AC (Activated Carbon) under CO_2 atmosphere, and found that the NO conversion inhibition effect of CO_2 could be reduced by Mn metal and increased by Ce metal. Wu et al. [7] have worked on the ratio of NH_3 to NO at the temperature range of 100-220°C and found that 1.05:1 would be a better choice to improve NO conversation. In this work, under simulated flue gas (both N_2 and CO_2 atmosphere) condition, Mn-Ce/TiO_2 catalysts were studied, which were prepared by impregnation method. While altering NH_3-NO ratio at 250°C, 1.2:1 could be a better NH_3-NO ratio.

Reductant and reaction

Generally, NH_3, $CO(NH_2)_2$, CH_3CH_2OH, C_3H_6, and H_2 have been chosen as the SCR reductants. Among them, NH_3 is normally used in industry. In Figure 1. SCR reaction mechanism was showed. The main chemical reaction equations are as following:

(1) Under rich O_2 condition.

$$4NH_3 + 4NO + O_2 \rightarrow 4N_2 + 6H_2O \quad (1)$$

$$4NH_3 + 2NO_2 + O_2 \rightarrow 3N_2 + 6H_2O \quad (2)$$

(2)Under absence of O_2 condition.

$$8NH_3 + 6NO_2 \rightarrow 7N_2 + 12H_2O \quad (3)$$

$$4NH_3 + 6NO \rightarrow 5N_2 + 6H_2O \quad (4)$$
$$2NH_3 + NO + NO_2 \rightarrow 2N_2 + 3H_2O \quad (5)$$
(3) Directly reaction of NH_3 and O_2
$$4NH_3 + 5O_2 \rightarrow 4NO + 6H_2O \quad (6)$$
$$2NH_3 + 2O_2 \rightarrow N_2O + 3H_2O \quad (7)$$

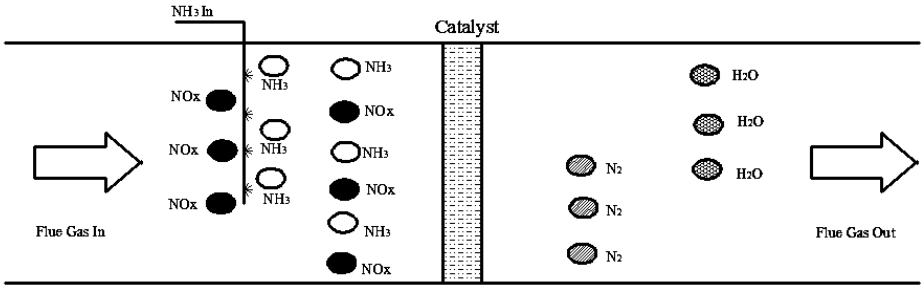

Figure 1. NH_3-SCR reaction mechanism

Catalysts Preparation

In this work, impregnation method was used to prepare Mn-Ce/TiO_2 SCR catalysts. TiO_2 was chosen as catalyst support. About 50ml de-ionized water was needed to dissolve $Ce(NO_3)_3 \cdot 6H_2O$ and $Mn(NO_3)_2$, then TiO_2 powder was mixed with $Ce(NO_3)_3$ and $Mn(NO_3)_2$ solution. The solution was stirred on an automatic mixer about a hour, to insure Mn- and Ce- to be adhered on TiO_2 surface. The solution was put in the 90°C thermostatic waterbath till only solid left.

Mn-Ce/TiO_2 catalyst solid was dried by a muffle furnace for 12 hours after constant warm water bath, then the dried catalyst was grinded to 40-100 mesh. The catalyst shoud be put in fixed-bed to be calcined at 500 °C for 2 h and then cooled down to indoor temperature in N_2 atmosphere.

Experimental System

This experiment was carried out in the fixed-bed reactor. Catalyst would be put into fixed-bed reactor before simulated gases (N_2/CO_2, O_2 and NH_3) was introduced into the fixed-bed reactor. Figure 2 shows the NH_3-SCR experiment system.

The feed gas was composed of a certain ratio of N_2/CO_2, O_2 and NO, which were controlled by mass flow meters. The simulated gases were mixed in the gas mixer. In the composition gas, N_2/CO_2 was used as balanced gas. The simulated gases were introduced into fixed-bed reactor that was controlled by the temperature controller. In the fixed-bed reactor, DeNOx reactions would proceed. Testo 350 XL Flue Gas Analyzer was used to analyse the NO concentration, and at the same time the computer could record the experiment data. The exhausted flue gas shoud be collected in case of poison the experimenters.

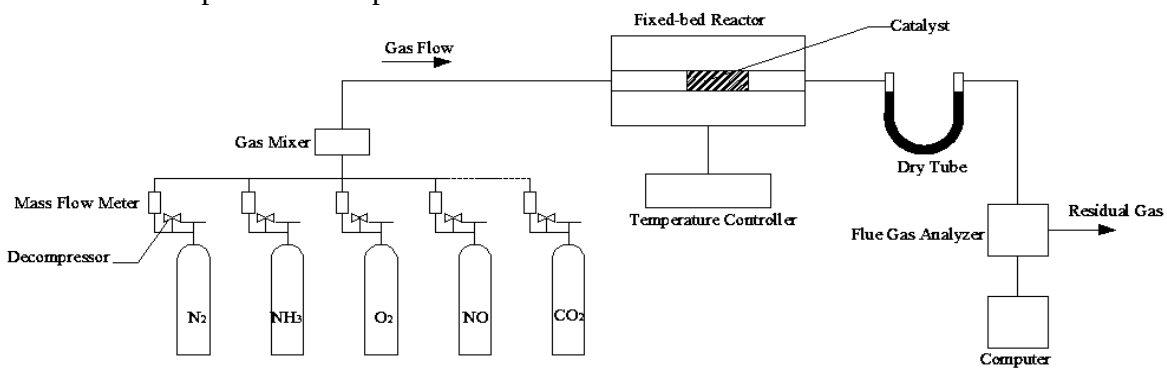

Figure 2. Fixed-bed NH_3-SCR experiment system.

The NO conversion was calculated using the following equation:

$$\eta_{NO}\ (\%) = \frac{NO_{inlet} - NO_{outlet}}{NO_{inlet}} \times 100\% \quad (8)$$

η_{NO} is the convesion of NO,%; NO_{inlet} is the introduced NO concentration, ppm; NO_{outlet} is the NO concentration in the outlet of the reactor, ppm.

Results and Discussions

In Mn-Ce/TiO_2 catalysts, the molar ratio of Mn- and Ti was 0.4:1, and the molar ratio of Mn- and Ce- was 5:1. The total flow mass of simulated gas was 1400ml/min; space velocity 4000 h^{-1}; O_2 content 6%; NO content 700ppm; NH_3 content 700ppm. N_2/CO_2 was presented as balanced gas. in the experiment, the temperature range was between 25°C and 300°C. In changing ammonia-nitrogen oxide ratio experiment, NO content was fixed.

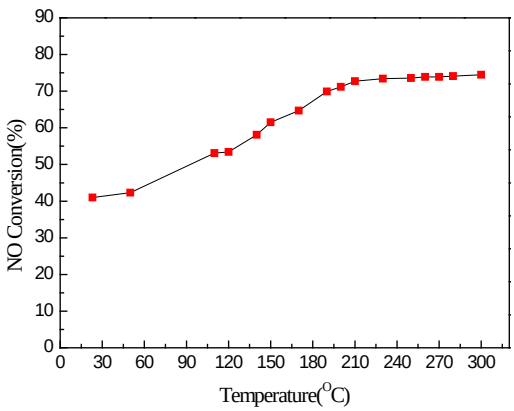

Figure 3. NO conversion under N_2 atmosphere

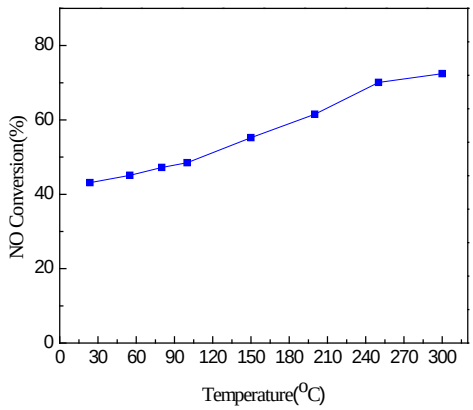

Figure 4. NO conversion under CO_2 atmosphere

From Figure 3, under N_2 atmosphere, NO conversion shows a trend of increasing with the rise of temperature, and the highest conversion rate is 74.5% at 300 °C. As shown in Figure 4, under CO_2 atmosphere the trend is familiar with N_2 atmosphere, and the highest NO conversion rate is 72.4% at the temperature of 300°C. The results show that CO_2 would inhibit NO conversion compared with N_2.

As shown in Figure 5, with the rising of ammonia-nitrogen oxide ratio, NO conversion rate increases first and then becomes stable at a higer rato. 1.2∶1 would be a better NH_3-NO ratio with Mn-Ce/TiO_2 catalysts in the experiments.

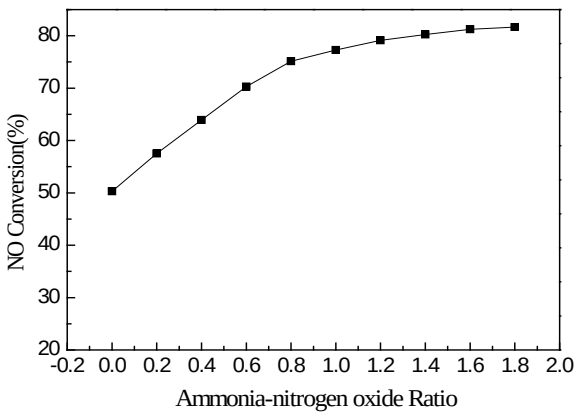

Figure 5. NO conversion changing with ammonia-nitrogen oxide ratio at 250 °C

Conclusion

In this work, Mn-Ce/TiO_2 catalysts were used for SCR reaction under CO_2 and N_2 atmosphere respectively. The results showed that CO_2 would inhibit NO conversion and a higher NH_3-NO ratio could increase NO conversion.

Acknowledgements

This work was financially supported by the Hebei Applied Basic Research Program of China (Grant No. 13964503D).

References

[1] Thirupathi Boningari, Padmanabha R. Ettireddy, Arpad Somogyvari, Yi Liu, Alexander Vorontsov, Carl A. McDonald, Panagiotis G. Smirniotis. Influence of elevated surface texture hydrated titania on Ce-dopedMn/TiO_2 catalysts for the low-temperature SCR of NOx under oxygen-rich conditions [J]. Journal of Catalysis, 2015 325 145-155.

[2] Junlin Xie, De Fang, Feng He, Junfu Chen, Zhengbing Fu, Xiaolin Chen. Performance and mechanism about MnOx species included in MnOx/TiO_2 catalysts for SCR at low temperature [J]. Catalysis Communications, 2012 28 77-81.

[3] Lu Qiu, Dandan Pang, Changliang Zhang, Jiaojiao Meng, Rongshu Zhu, Feng Ouyang. In situ IR studies of Co and Ce doped Mn/TiO_2 catalyst for low-temperature selective catalytic reductionof NO with NH_3 Catalysis Today, 2013 216 76-81.

[4] De Fang, Junlin Xie, Hua Hu, Hu Yang, Feng He, Zhengbing FuIdentification of MnOx species and Mn valence states in MnOx/TiO_2 catalysts for low temperature SCR [J]. Chemical Engineering Journal, 2015 271 23-30.

[5] Guofeng Yu, Yanfei Wei, Ruiben Jin, Hong Zhu, Zhenyu Gu, Lili Pan Study on the DeNOx activity of the Mn-Ce-Co /TiO_2 catalyst at low temperature [J]. Acta Scientiae Circumstantiae, 2012 32 1743-1749. (In Chinese)

[6] Xiang Gou, Chunfei Wu, Kai Zhang, Guoyou Xu, Meng Si, Yating Wang, Enyu Wang, Liansheng Liu, Jinxiang Wu. Low Temperature Performance of Selective Catalytic Reduction of NO with NH_3 under a Concentrated CO_2 Atmosphere [J]. Energies, 2015 8 12331-2341.

[7] Lixia Wu, Hong Zhu, Huafeng Mao Study on the molding technology of honey corn Mn-Ce /TiO_2 catalysts for low-temperature selective catalytic reduction [J]. Energy and Environment, 2012 5 36-40. (In Chinese)