Study on Bearing Capacity of the Connection between Concrete-Filled Twin Steel Tubes Column and Steel Beam

ZHANG Yufen，WANG Qiang

School of Civil Engineering，North China University of Technology，Beijing，100144，China;

Keywords: CFTST column; steel beam;; vertical stiffener; anchorage plate; bearing capacity

Abstract: This study evaluates the bearing capacity of a new type of connection between the concrete-filled twin steel tubes (CFTST) column and steel beams. The formation and feature of the connection were described. The tensile force from girder flange is mainly transferred by vertical stiffener and anchorage plate according to the analysis of experiment and finite element simulation, so the model of tensile beam flange was proper to analyze the bearing capacity of the joint. Theoretical formula to calculate the load-bearing capability of this joint was derived. Compared with experimental results , calculated results were basically correct but conservative. Theoretical formula to calculate the load-bearing capability of this joint was derived from the model of tensile beam flange. Compared with experimental results, calculated results with the error of 2.16~4.14%, were basically correct but conservative. All the research results can provide a basis for its further research and application in practice.

Introduction

Concrete-filled steel tube (CFST) columns are being more widely used in the building construction due to their excellent static and earthquake-resistant properties. However, if a high-rise building is damaged by fire, the steel tube outside the concrete will reduce the confinement behavior then to influence the whole structure, so there occurs concrete-filled twin steel tubes (CFTST) column. CFTST column consists of an inner tubular section and an outer tubular section, fully filled with concrete. As an ideal section of inner circular tube and outer square tube, the CFTST column takes advantage of not only the good performance of circular steel tubes to confine concrete but also the convenient connection of square steel tubes to beams.. According to some references [1~3], this type of CFTST column similar to common CFST column, exhibit excellent structural and constructional benefits, such as high strength, high ductility, and large energy-absorption capacity.with good fireproof property as well as higher collapse preventing ability[4], can be applied to high-rise building, ultra-high-rise buildings and bridge engineering.

As the CFTST column has double skin tubes internal and external, the new type of vertical stiffener connection between CFTST and H-Shaped steel beam was designed in 2012(Zhang). In this paper, the structure form , mechanical characteristics and transference mechanism of this new type of joint was summarized and analyzed. The model of tensile beam flange was obtained to analyze the ultimate bearing capacity of the joint.

Structure Form and Features of the Connection

The vertical stiffener connection between CFTST and H-Shaped steel beam is shown in Fig.1 and Fig.2. As we can see in the Fig.1, vertical stiffener is groove welded on the column flange, and its

extension was welded to the end plate sides, so the extension is same long as the widened end plate. In order to avoid the stress concentration problem, so the radius-cut section is the used for the end plate. The end plate as wide as the column flange was butt welded to the beam flange.

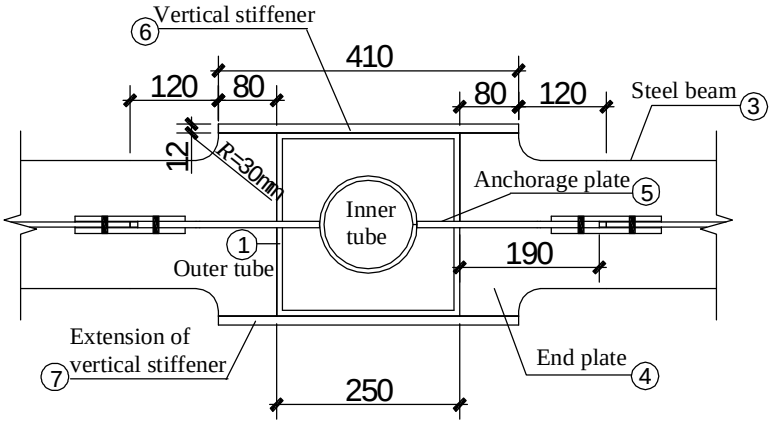

Fig.1 Ichnography Details of CFTST column-beam joint

It can be realized that the part of beam flange near the column flange will weaken the column; thereby the widened end plate induces the location of plastic hinge formation inside of the beam in order to prevent the brittle fracture of the columns. The application of anchorage plate (No.⑤ in Fig.1) embedded in the concrete between inner tube and outer tube, can improved workability and globality of the joint. Because the anchorage plate embedded inside the concrete is higher than beam web, anchorage plate can be chosen as two types including with triangle ribs (see SBJ2-1 in Fig.2(b)) and without ribs (see SBJ1-1 in Fig.2(a)). As shown in Fig.2(b), in the ribbed connection, the end plate and outer tube are slotted and double bevel groove welded to the ribbed anchorage plate. Therefore, this fully restrained connection is commonly characterized by: (1) vertical stiffener; (2) anchorage plate; and (3) reduced beam section. All continuity plates were welded to columns using partial-penetration double bevel groove welds. Complete-penetration single-bevel groove welds were used to connect the beam flanges to the column flange in all specimens.

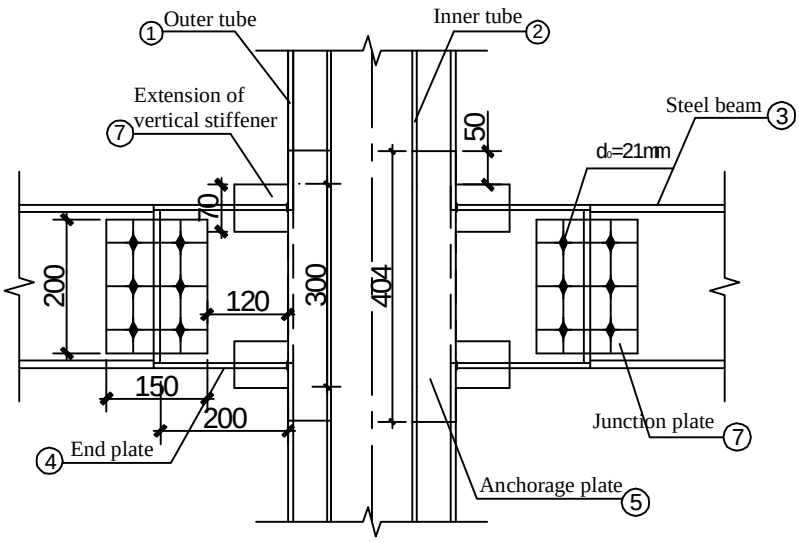

(a) SBJ1-1

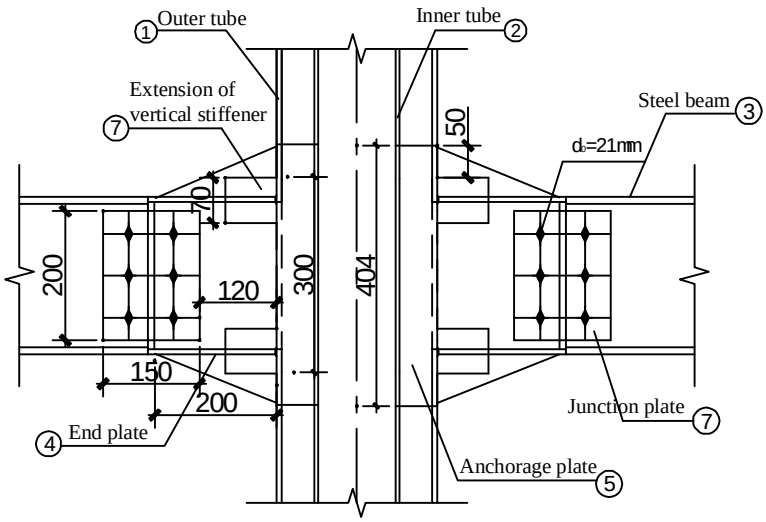

(b) SBJ2-1（ribbed connection）

Fig.2 Elevation View of CFTST column-beam joint

Six cross-form beam-column assemblage specimens were tested subjected to cyclic loads[5].The varying parameters include the extended length of the vertical stiffener, the presence or the absence of rib of the anchorage plate, the wall thickness of outer steel tube as well as the axial force ratio. By selecting a reasonable material constitutive relations and failure criterion, a finite element model was established on the basis of the experiment, which is shown in Fig.3, to study the seismic behavior of the joints under cyclic loads [6].

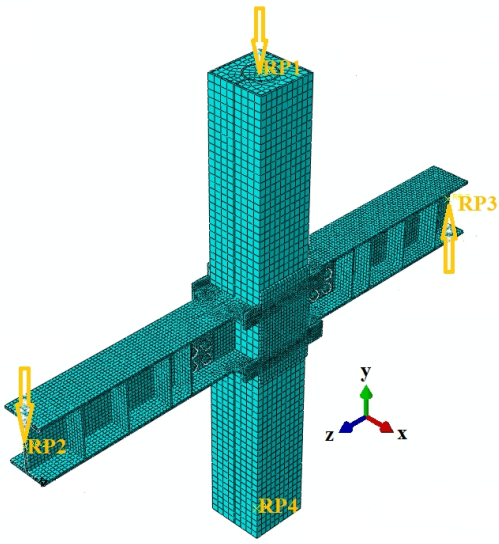

Fig.3 Finite element model

Transference Mechanism

Most anti-moment joints bear both bending moment and shear force. Besides, bending moment can be transformed into couple at the end of steel beam and thus the upper and lower flanges of the steel beam are acted upon by tensile force and stress respectively. The stress-passing members of CFTST joint include the end plate, vertical stiffener and the anchorage plate. In terms of force transferring path, the shear force is transmitted by the interaction of the wall of external steel tube, the core concrete of joint zone and anchorage plate; the tensile force exerted on flanges of the steel beam is

firstly passed from vertical stiffener to the web of outer steel tube by end plate weld, and eventually the load will be transmitted to the core region of joint via anchorage plate.

Vertical Stiffener

Vertical stiffener is a vital member, which effectively reduced the stress concentration of the joint, adjusted the position of plastic hinge and created an obvious plastic hinge in the middle area of the steel beam. With the increase of extended length of the vertical stiffener, specimen carries a higher bearing capacity and stiffness because the joint core zone is further effectively protected. According the experimental phenomena, specimens failure were all started in the horizontal end plate arc zone. Accordingly, due to the fact that bending moment of rigid joint is transmitted from beam to column in the form of tensile and compressive beam flange, the connection performance and working capability of beam flange, especially the one in tensile condition to column, which will directly the entire bearing capacity of the joint, is of vital importance to the mechanical properties in the joint zone. The stress condition and the MISES stress in Fig.4, demonstrates that the tensile flange plays an important role in the transmission of axial force to the core concrete. In order to simplify the object of the study and grasp the core of the problem, the transmission of axial force in the compressive flange is also satisfied if the tensile flange can transmit the axial force successfully, so the tension model of the steel beam flange is adopted to discuss the problem of transmission mechanism and bearing capacity of the joint. The tension model of beam flange is shown in Fig.5. Direction 1 in Fig.5 stands for the tension of flange transmitted by vertical stiffener and the corresponding tension named P_1 is also shown in Fig. 4; Direction 2 in Fig.7 stands for the horizontal load assumed by the column flange and the horizontal tension taken on by anchorage plate.

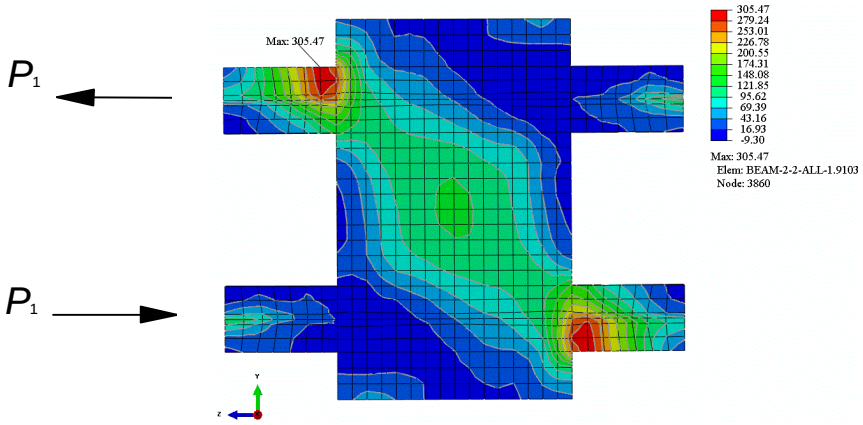

Fig. 4 Free-body diagram and MISES stress of vertical stiffener

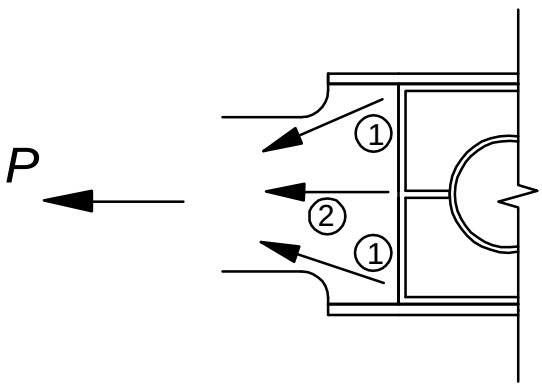

Fig.5 Tension model of girder flange

In this new type of joint, force on the flanges is directly passed on from horizontal end plate to vertical stiffener. On the premise of a guaranteed weld and according to the static equilibrium as well as the ultimate strength of the steel, the calculation of the ultimate tension assumed by vertical stiffener can be expressed as follows:

$$P_1 = h_s t_s f_s \qquad (1)$$

where, t_s——the thickness of the vertical stiffener, which equals to 11.55mm in the test;

h_s——the height of the vertical stiffener, which equals to70mm in the test;

f_s——the ultimate strength of the vertical stiffener, which is 445.8MPa in the test.

Anchorage Plate

The anchorage plate embedded in the concrete between internal and external steel tube, the extension of which is connected to the web of the steel beam to transmit the shear force in the joint and bear the tension passed from the flange of the steel beam. As far as this new CFTST joint is concerned, it can be testified by the experiment that with the increase of the load at the end of beam and the cyclic times, the anchorage plate is capable of passing the tension exerted on it to the inner tube, making the joint core zone an integrated part. So the function of the anchorage plate is to transmit tension to the joint core concrete zone and the square steel tube wall , meanwhile, a “Die cutting of cone” is also formed. The “Die cutting of cone” is showed in Fig.6, in which φ stands for cutting cone apex angle and P_2 stands for the tension transmitted from the anchorage plate.

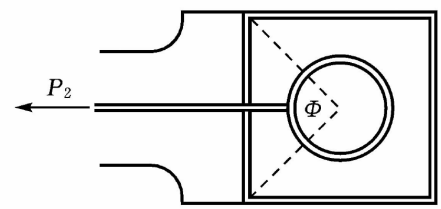

Fig.6 Free-body diagram of anchorage plate

Anchorage plate MISES stress obtained by finite element analysis, i.e. one with no rib and the ribbed one, both shows that the high stress zones are outside the joint core due to the existence of concrete in the core zone. When ignoring the contribution of the concrete and the web of the steel tube, we can obtain the calculation formula 2 to calculate the tension of the beam flange (P_2). The stress distribution from the FEM analysis in the anchorage plate indicates that the transmission of the beam flange is supposed to be halved.

$$P_2 = h_m t_m f_m \qquad (2)$$

where, t_m——the thickness of the anchorage plate, which equals to7mm in the test;

h_m——the height of the anchorage plate, which equals to 80 mm in the test;

f_m——he ultimate strength of the anchorage plate, which is 481.7MPa in the test.

Calculation and the Comparison of the Bearing Capacity

The transmission of the tension of the steel beam flange mainly relies on the vertical stiffener and the anchorage plate. An obvious plastic hinge was seen on the steel beam at the radian of the horizontal end plate from both experiments and FEM analysis. The contribution of the steel tube beam and the concrete to the bearing capacity of the joint is ignored and the tensile bearing capacity calculation formula is deduced on the basis of static equilibrium. The bending moment created by the concentrated form from the beam-end can be transformed to couple, which will further act upon

the upper and lower flange via the effect of tension and compressive force. On the premise of the equivalent tension and compressive force, the ultimate load P' of the beam-end can be expressed below:

$$P' = Ph_s / l_m \qquad (3)$$

where l_m stands for the distance between the plastic hinge and the beam-end; $P = 2P_1 + P_2$, is the ultimate tension of the beam flange. The comparison between the outcome of the calculation of the ultimate bearing capacity and the data of the test is shown in Table.1. Compared with experimental results[5], calculated results with the error of 2.16~4.14%, were basically correct. Despite the calculated value is conservative, the tension model of the beam flange can be applied to the calculation of this new joint of CFTST.

Table 2 Comparison between test results and calculated strengths

Specimens	l_m (mm)	Formula for P	Calculated value (*kN*)	Test value (*kN*)	Error (%)
SBJ1-1	900	$P = 2h_s t_s f_s + \frac{1}{2} h_m t_m f_m$	231.2	238.3	2.98
SBJ1-2	860		241.9	251.1	3.66
SBJ2-1	900	$P = 2h_s t_s f_s + h_m t_m f_m$	267.7	273.6	2.16
SBJ2-2	860		280.1	292.2	4.14

Conclusions

A tension model of steel beam for the new joint of CFTST is built through the test and the FEM analysis. In this model, the contribution of the steel tube and the core concrete to the bearing capacity of the joint is ignored and the tension passed from steel beam flange mainly relies on the transmission of vertical stiffener and anchorage plate. The force transference Mechanism of vertical stiffener and anchorage plate is analyzed and the influence of construction parameter of them on the joint is obtained. The calculation formula of the ultimate bearing capacity of beam flange is obtained. The comparison between the calculation outcome and the test of the cyclic load demonstrated that despite the value of the result is conservative, the model is feasible.

Acknowledgments

The authors would like to acknowledge the support provided by the Chinese National Science Foundation (Grant No. 51478004)

References

[1] Cai Shaohuai and Jiao Zhanshuan. Behavior and ultimate load analysis of multi-barrel tube-confined concrete columns. *Journal of Building Structures,* 1997, 18(6):20-25. (in Chinese)

[2] Zhang Yyfen，Zhao Junhai. and Yuan Weifeng. 2013. Study on Compressive Bearing Capacity of Concrete Filled Square Steel Tube Column reinforced by Circular Steel Tube Inside. *Journal of Civil Engineering and Management*，2013, 19(6):787-795

[3] Pei Wanji. Research on mechanical performance of multibarrel tube-confined concrete columms. Xi'an(China): Chang'an University, 2005

[4] Zhang Y.F., Zhao J.H., Cai CS. Seismic behavior of ring beam joints between concrete-filled twin steel tubes columns and reinforced concrete beams[J]．*Engineering Structures*, 2012, 39(6):1-10

[5] Zhang Yufen, Zhang Dongfang. Experimental Study on Seismic Behavior of the Connection between Concrete Filled Twin Steel Tubes Column and Steel Beam. European *Journal of Environmental and Civil Engineering*, 2015，19(3):347-365

[6] ZHANG Dongfang，ZHAO Junhai，ZHANG Yufen et al. Finite element analysis of seismic performance of composite concrete-filled steel tube column-steel beam connection [J]. *World Earthquake Engineering*, 2013, 29(1):49-59. （in Chinese)