Using Arduino to Introduce the Concepts of Mechatronics to College Fresh-Persons

Li Xiaoming and Li Zhen
Department of Mechatronics
Faculty of Mechanical Engineering and Automation, Zhejiang Sci-Tech University
Hangzhou, China 310018
lxmzist@zstu.edu.cn, lizhen3251193@163.com

Abstract—Mechatronics, as a complex discipline which covers the fields of mechanics, electronics, information, computer science and control, is sometimes very hard to be understood and accepted by fresh-persons , who have little knowledge or experiences on engineering. They may not choose mechatronics as their major just because they felt frustrated with so many new terminologies and worry the potential difficulties to acquire expertise on these fields. In order to attract more students to study mechatronics, we designed a program based on Arduino. Through this program we taught students basic concepts and ideas about mechatronics, demonstrated how easy it is to build a mechatronic product and the fun when they were doing so. The two-week program is composed by a series of lectures about Arduino, hands on training on how to use it, and finalized by a smart car project. This program has been lasted for two years and the enrollment ratio has improved greatly.

Keywords-Arduino; major selection; undergraduate, fresh-person, Mechatronics

I. INTRODUCTION

Mechatronics, as a major, exists in many universities and colleges in China. It is originated from Mechanical Engineering, but put more emphasis on the integration with electronics, control, information, and intelligence. Nowadays mechatronics has evolved from cross-disciplinary to thematic, due to the demands from industry and society[1]. This major followed the trend of mechanical industry, allowing its students to implement machines with more intelligence and automation, therefore it soon got very popular in both school and labor market. The major of mechatronics in Zhejiang Sci-Tech University (ZSTU) has been established in 2007. Its characters, such as embedded system design, motion control technology, industrial background of textile machinery, as well as mechanism design, made it grow rapidly in both teaching and researching. By 2015, there are average three classes of students studied in this major every year.

Due to the complexity of mechatronic technical system, students who just graduated from high school feels it is difficult to understand what mechatronics is and what they can do in this field. In order to improve the awareness of mechatronics among first grade students, we designed a fresh-person oriented program, and chose the Arduino as the platform.

Arduino is an open-sourced hardware and software system, which was initially designed for promotion of programming skills among youngsters[2]. Because of its ease of use, and economic unit cost, it soon became very popular[3]. It also has gained a position in engineering education in universities, such as course projects[4], platform for robotics[5], practice teaching in mechatronics[6] and automation[7], E-learning[8], and competitions[9]. However these applications and researches were mainly focused on the replacement of controllers with cheap Arduino boards, which were not applicable to fresh-persons in college.

In this paper, we will introduce our efforts on how to adopt Arduino as a powerful tool to promote mechatronics concepts and ideas to students who just stepped into the university classroom and ignite their enthusiasm on robotics, intelligent machines and other mechatronical system, and therefore attract more students to study the mechatronics.

II. MOTIVATION

A. Attracting excellent students to the major

We encountered difficulties in attracting students to this major in the past years. The admission procedure of undergraduates has changed from major-based admission to second discipline based admission. In another words, the students enrolled in as mechanical engineering as their platform major, and they would choose a more specific major when they finished studying the platform courses, which was usually one or one and a half year after they entered the university. From then on, we found that the proportion of first choice of mechatronics was very low comparing with other competing majors, followed by a declination of evaluation of graduated students in the next few years. This situation needs us to answer a question: “how can we attract excellent students to study in this major?”

After formal and informal discussions with students, we drew the conclusion that the top three reasons that led the students away from mechatronics were: (1) Don’t know what mechatronics is and don’t know what can I do after graduation from this major; (2) Electronics is very difficult to learn, so that I may fail if I choose mechatronics; (3) Suggestions from other classmates, especially those who perform good in grade one.

According to our analysis, all these questions are related to the vague understanding about mechatronics. What we need to do is to find a way to contact the students and show them the true meaning of mechatronics.

© 2016. The authors - Published by Atlantis Press

B. *Conveying the basic concepts of mechatronics*

To understand mechatronic system, one must understand some basic concepts, such as interface, analog vs digital , controller, driver, actuator, input / output, circuit, logic, etc. However these concepts can only be sensed but hardly expressed in words, which furthers the difficulty to those fresh-person who have no experiences in practical engineering. However, once they understand those concepts, they will soon realize how mechatronic system works.

Arduino is an electric circuit board containing a micro-controller (MCU) and lead-out wires of the controller, and can connect with other devices through simple circuits. Therefore Arduino is an excellent platform for developing many kinds of mechatronic system[10], and experiencing the meaning of many terminologies used in physics, electronics, controls and computer software.

In 2013 we initiated a program called Arduino Training and Competing Program (ATCP). This program is oriented to the first grade mechanical engineering students, and free to participating students. ATCP is sponsored by the Department of Mechatronics in ZSTU, and teachers involved in this program were all volunteers from the department. The following section will give a more detailed description of this program.

III. DESIGN OF ATCP

Arduino Training and Competing Program (ATCP) was designed for those who has little knowledge about mechatronics but wish to learn more about mechatronics. So when we began to design this program we have concerns listed as follows:

Lectures must be easy to understand and follow. Each lecture should be no more than 20 minutes long, and should be focused on how to use Arduino instead of explain the working principle of it.

Contents of the training should be selected carefully to reflect the application of mechatronics. Examples in the training should be close to the daily life of students.

The demonstrating experiment which comes with each lecture must be able to be completed successfully by most of the students within scheduled course time span.

Time must be reserved in very lecture for students and teachers so that they can discuss freely on any topic related with mechatronics. This can ensure the quality of the lectures through feedback from students.

Concepts should be explained in both practical and theoretic way. Through practice, students can “observe” the concepts, and with explicit theoretic explanation will let them “touch” the concepts.

Sense of self-accomplishment should be felt by students with the final competing project. The final project should be tuned suitable for these students to work on but the competition will made the project also challenging.

With these concerns we carefully designed the ATCP, and it worked very well among students enrolled in 2014 and 2015.

A. *Big picture of ATCP*

ATCP is compose by a motivating orientation, a training course, a practical project and a final competition. The period of the whole activity is about 4-6 weeks, and rewards are given to those winners of the competition. The rewards include prizes, credits for engineering training course, and certificates.

The motivating orientation meeting is hold at beginning of second term of each academic year. A report will be given to the students about the program, and the introduction of Arduino.

After the orientation students may choose to apply a seat in the program. The program can offer about 20-30 seats at a time, and the attendees are selected according to the order of their applications, and their statements in the application forms.

The course will start after the application process. The course is consists of 4 lectures, and each lecture will be accompanied by some course experiments. Students can do the experiment together with the progress of lecture and apply immediately the knowledge they have just learned. Beside the teacher who give the lecture, there will be another two teachers who walk around the classroom and give students help if they need.

At the end of each lecture, an open discussion will be conducted by the lecturer and most of the time the topics are related to the experiments they just did. However sometimes we may try to expand the thoughts of the students to encourage them to find more practical usage of Arduino in their daily life.

The scheduled time for one lecture is about 1 hour, which includes 20 minutes for presentation and 40 minutes for experiments.

When the lectures are all given, the students will be assigned a project they will need to work out in two weeks and attend the competition. The projects are different each time but we try to use existing hardware platform in avoiding the difficulties of processing and manufacturing. The competition will have two rounds, which are the qualification round and the prize round. Student who pass the qualification round will receive a certificate and be illegible for the prize round. Students ranks high in the final competition will get prize as well as credits for out-class research and engineering practice activities.

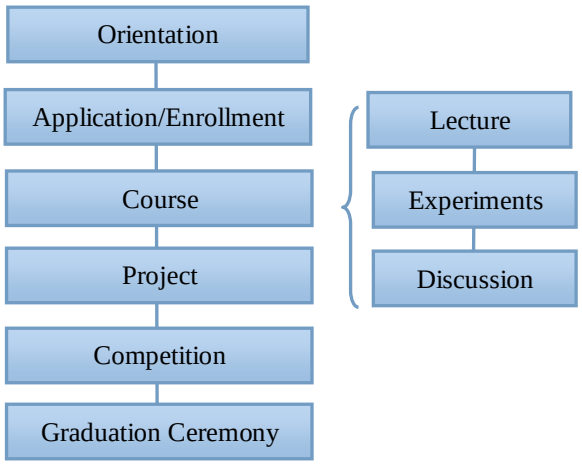

Figure 1. Procedure of ATCP

B. *Design of the syllabus*

Arduino is an easy-to-learn software / hardware platform, but there are still a lot of things can be taught to a starter. We have only 4 lectures to give the lessons so the

content should be tailored to fit this schedule but still be enough to build a small mechatronic system.

With consideration we designed a syllabus showed in the following table. We chose the content that can mostly reflect the ideas of mechatronics like the interface technology, driver of the motor, distance sensors and the control using software. All these contents are revised to a simplified version, which allow the students to understand these concepts, and the way to use them without caring about the technical details.

For example when we give the lecture about the DC motor drivers, we won't talk the principle or circuit of the driver, but we use an analogy of energy amplifier to describe it, letting students to understand that the Arduino cannot drive the DC motor directly because of the power output from Arduino is far less than a motor needed.

TABLE I. CONTENTS OF THE COURSE

Lecture	Contents	
	In presentation	***In experiments***
1	Introduction to Arduino - Hardware interface - Software structure - Preparation	- Connect to PC - Install IDE - "Hello, world"
2	Interface technology - Digital I/O - Analog input - PWM	- Flash on-board LED - Adjust LED's brightness - Switch controlled LED - Light controlled LED
3	Motors - drives a Dc motor - Control a servo-motor	- Control a servo-motor
4	Sensors - Ultra-Sonic distance measurement - Line detector	- Radar sound alarm

C. Design of the in-class experiments

Every lecture is accompanied with at least one experiment, which is called in-class experiment. These experiments are designed to convey the ideas of the mechatronics, as well as to verify what they had learned from lectures. A very good example is the comparison of the "hardware switch", "digital switch" and the "software-controlled switch".

A "hardware switch" is a physical switch used to control the LED lamp in the circuit. It is a very basic physician experiment which has been demonstrated in most high schools or middle schools. The switch controls the on / off the electric current, therefore controls the on / off of the LED lamp.

A "digital switch" is a switch implemented by utilizing the semi-conductor units, such as transistors or integrated circuits. Instead of directly control the physical open/close of the circuit, the digital switch uses a software switch to control the target.

A "software switch" is switch function that imitated by a piece of code. A LED lamp can be switched on/off by software running on a computing device. In our class the software switch is illustrated on Arduino with some simple codes.

We have designed an in-class experiment to demonstrate the ideas of those switches, and through this experiment we explained the core idea of mechatronics.

In Fig .2 a hardware switch controlled software switch experiment has been given. Instead of directly control the LED lamp using a mechanical switch, we connect the LED lamp to the digital output of Arduino, so that the LED lamp can be controlled by software running on the Arduino. What's more, a mechanical switch is used to control the running of the software.

This is easy experiment, but it demonstrates the complete idea of mechatronics. When we give this experiment in classroom, we ask the question: "what's the difference between this system and the physical switch system?"

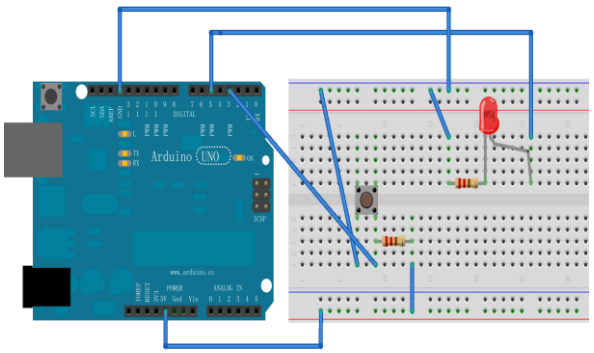

Figure 2.A hardware switch controlled software switch

Students may answer that the difference is that the software replaces the hard-wire. Then we ask what are the benefits to do so? The good answer to this should be "flexibility" and "modularity". Flexibility means the function can be improved in a very low cost comparing with those wire-controlled, and modularity means the system can be implemented in a modular way, because the "input", "output" and "control" are now loosely coupled, and can be designed independently.

That is it. The basic ideas of mechatronics are software and control. It is software that makes the complex mechanical system easy and flexible, and the control makes the system smart and efficient.

We are trying to impress the students with such kind of thinking in every lecture and experiment, and expecting them to understand the mechatronics.

D. Design of the competition

There is a competition as the last step of the ATCP to check if the student has mastered the knowledge and concepts of mechatronic system. The students are required to build a mechatronic system to attend the contest using provided mechatronic unit parts. During this process, the students need to understand how to connect each parts with the Arduino and what kind of signal should be send to control them, as well as the how to program the corresponding software.

During the design of the system, we put an emphasis on algorithms. For first grade students it is a little hard to understand the what the algorithms is because they lack the knowledge of control theory or software engineering. However this project gives them an opportunity to experience what algorithms are and the role they play in an mechatronic system.

We provide a prototype of control algorithms with the source code so that the students can make their machine

work, but they need to improve it to make the system work better.

There are two competition projects have been designed, and both of them are based on Arduino controlled vehicles. In the first project an anonymous vehicle will be implemented and is required to pass a winding lane. In second project a line-following car should be implemented and is required to pass along a winding line from the start point to the end point. The competing fields of the two projects are shown in Fig .3.

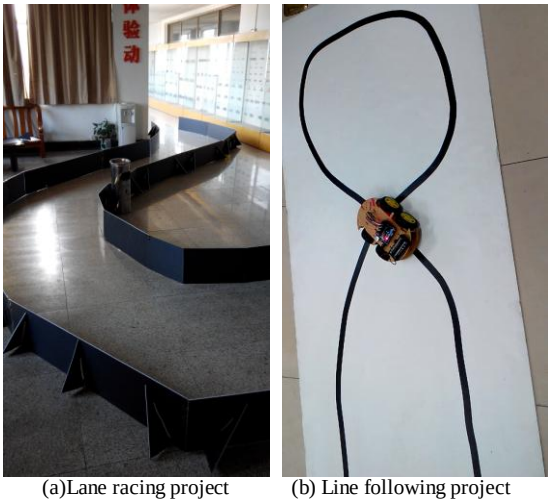

(a)Lane racing project (b) Line following project

Figure 3. Two projects for competition

The lane racing project need a ultrasound distance module to help determine the position of the walls, while the line following project need a line-detector module to determine the relative position of the car on the line, except which they are the same. The goals of them is also same: to reach the end point as fast as it can. In each competition the car which can finish the task is considered qualified, and the car which can finish the task in shortest time is considered the first prize.

With the help of these competing projects, students will analyze the example codes and seek ways to improve the performance of their cars, including but not limited to: reconfiguration of the structure of the car, faster sensor data processing speed, faster and stabler control algorithms, and optimization of some specific parameters. They do not understand the mathematical theory behind this, but they can find the improvements by doing so. It will be very helpful when they study the knowledge in the future.

IV. PRACTICE OF ATCP

ATCP has been implemented continuously in the year of 2014 and 2015, with two classes every academic year, and totally 98 students has been enrolled in this program. Among these students, 76.2% have passed the qualification round of competition and received the certificates. The ratio of the attendance is 13% and 17% correspondingly. According to the major diversion results in 2014, the program has achieved a dramatic success (shown in Fig. 4). We also found some problems during the implementation of this program.

A. Achievements

At the end of the first academic year, the students studying in the mechanical platform will chose their major among 5 subdivision majors. Mechatronics is one among them. Fig .4 shows the application rate and acceptance rate of mechatronics major from the year 2012 to 2014.

The application rate indicates how many students choose mechatronics as their first option. The acceptance rate means the how many applications have been granted admission. From Fig. 4 we can see that the application rate drops to the trough in 2013 and climbed dramatically in 2014. It is in 2014 we started the first ATCP for the first grade students, therefore the changes reflected the effect of the program.

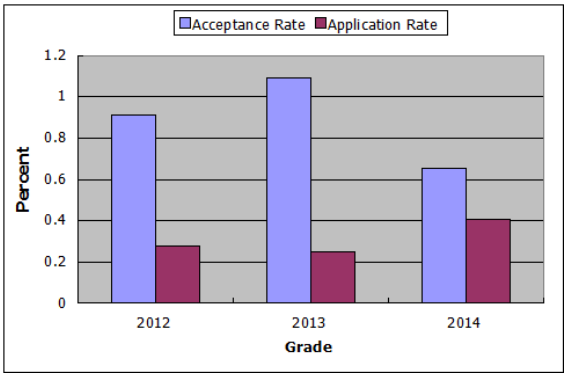

Figure 4.Facts about major diversion

The application rate of 2014 is about 0.4, which means there are 40 percent of students choose to study in mechatronics division instead of other four majors. The average grade points has increased from 2.899 in 2013 to 3.162 in 2014. These data reflected that the mechatronics has been recognized and accepted by students, and we are attracting more talented students to study mechatronics! Considering the history of Mechatronics in ZSTU has no more than seven years, it is a proud outcome.

The implementation of ATCP has gained attention from other majors on the same platform, which in turn encourage them to find ways to attract the new students. This is good for fresh-person in college because they have more opportunities to interact with different fields from different disciplines, which may help them to find the major they fit mostly.

During the process of training and competing, most of the students have obtained the skills to use Arduino in some simple applications. No matter they will study in Mechatronics or not, this skill will help them a lot when attending many kinds of competitions, such as the widely-known “National Challenge Cup”, “National Undergraduate Mechanical Design Competition”, “Fresh-talent Program of Zhejiang Province”, etc.

This program is also a platform to let the students and teachers from Mechatronics fields to know each other. Some students enrolled in the program have found positions in the teacher’s lab and began to take part in the research activities. That is the win-win situation. This program gives us a chance to find students with potentials in science and engineering.

B. Difficulties

We encountered many difficulties during the two implementation processes. Some of them were anticipated but some of them were out of expectation.

We have anticipated that the students may feel puzzled when they first get contacted with Arduino and circuits, however we underestimated the degree. Many of them even don't know how to use the breadboard. Our solution is to assign more teachers to the classroom on the first lesson.

The most difficult part is how to ensure the students' appearance in every lecture. As a grade one undergraduate student, one has to take many courses, attend many events from school or society, as well as all kinds of examinations. It is usually very hard to find a fixed time segment to fit all those students' schedules. Some students have to quit the courses because they cannot put enough time into this program. We have scheduled the course into 4 lectures in 4 weeks and try to avoid the dates of examinations and CET (College English Test). However this is still a problem.

Another phenomenon which is not good is that some students were trying to copy others' code instead of writing their own. This will happen partially because we are encouraging them to exchange ideas and algorithms. Anyway this is good chance to teach all students the difference between "reference" and "copy". It is our responsibility to find out this behavior and give the warning.

C. Discussion

First, Arduino plays a crucial role in ATCP. Arduino is useful, which is the reason that people get interested and motivated to learn it. Arduino is also easy to learn for beginners so that people can explore related areas without prior knowledge on hardware. Usefulness and ease of use make Arduino extremely suitable for the new college students to contact the fields of engineering, especially the field of Mechatronics. The success of ATCP should be attributed to Arduino, and our efforts have been made to offer students chances to use it, and to understand basic concepts of Mechatronics through using it.

Second, lectures, experiments and projects are useful methods to implement the ATCP. Just graduated from high school, the college fresh-persons have little opportunities to know Arduino or similar open-sourced hardware / software products, and their reserve of knowledge may not make it easy for them to learn Arduino all by themselves. Systematic training and fixed time schedule may also help them to overcome their inertia.

Third and last, the interaction between students and the teachers are also very import in the implementation of ATCP. It is not only to affect the teaching effects but also to give students the opportunity to know what the research and development activities on Mechatronics are like in real life. The interaction is part of the ATCP itself.

V. CONCLUSIONS

An Arduino based training and competing program has been designed and implemented in this paper among the first grade college students, in order to promote the discipline of mechatronics and basic concepts of mechatronics. This program is composed by a series of lectures, hands-on experiments and final projects for competition. This program has attracted mass attention from the undergraduate students and greatly improved the application rate and the quality of students enrolled in Mechatronics.

The future work of this program includes: (1) In order to increase the coverage of ATCP, a plan has been settled to put the ATCP online. (2) An interactive software program running on Arduino will be developed to make Arduino more acceptable to layperson

ACKNOWLEDGMENT

The work in paper is partially supported by the Major Construction Project of ZSTU with granted number "zyjh201201". It is also part of the work of Excellent Engineer Education and Training Program sponsored by both ZSTU and Chinese Ministry of Education. The author would like to thank the staff in the Departments of Mechatronics, ZSTU for their contribution to this work.

REFERENCES

[1] M. Grimheden, and M. Hanson, "Mechatronics−the Evolution of an Academic Discipline in Engineering Education." Mechatronics, vol. 15, Feb. 2005, pp. 179-192.

[2] M. Margolis, "Arduino cookbook," O'Reilly Media, Inc., Mar. 2011.

[3] "Arduino-Introduction," https://www.arduino.cc/en/Guide/Introduction, Oct. 27, 2015.

[4] R. Chancharoen, A. Sripakagorn, and K. Maneeratana, "An Arduino Kit for Learning Mechatronics and its Scalability in Semester Projects", 2014 International Conference on Teaching, Assessment and Learning (TALE), IEEE, Dec. 2014, pp. 505-510.

[5] C. García-Saura, and J. González-Gómez, "Low Cost Educational Platform for Robotics, Using Open-Sourced 3D Printers and Open-Sourced Hardware", Proceedings of ICERI2012, Nov. 2012, Madrid, Spain , pp. 2699-2706.

[6] Y. Li, X. Pei, and H. Li, "Introduction of Arduino in Practice Teaching for Mechanical Electronics Specialty", China Modern Educational Equipment, vol 2015, Jan. 2015, pp. 61-63.

[7] G. Zhao, W. Wang, and X. Cai, "Research on Application Mode in Automation Specialty of Open-Source Hardware", Research and Exploration in Laboratory, Dec. 2013.

[8] A. E. James, K. M. Chao, W. Li, et al. "An Ecosystem for E-learning in Mechatronics: The CLEM project." e-Business Engineering (ICEBE), 2013 IEEE 10th International Conference on. IEEE, 2013, pp. 62-69.

[9] R. Grover, S. Krishnan, T. Shoup, and M. Khanbaghi1, "A Competition-based Approach for Undergraduate Mechatronics Education Using the Arduino Platform." Interdisciplinary Engineering Design Education Conference (IEDEC), 2014 4th. IEEE, Mar. 2014, pp. 78-83.

[10] T. Karvinen, and K. Karvinen. "Make: Arduino Bots and Gadgets: Six Embedded Projects with Open Source Hardware and Software." O'Reilly Media, Inc., Mar. 2011.