Common Fault Detection and Diagnosis of Santana Clutch

Yang Na
Mechanical and electrical technology department
Xijing University,
Shaanxi Xi'an ,China
e-mail: 515569778@qq.com

Miao Shang
Mechanical and electrical technology department
Xijing University,
Shaanxi Xi'an ,China
e-mail:445700839@qq.com

Abstract—Clutch which is the vehicle power transmission device is a core part of the car chassis, is also the site of failure occurs easily and if found not timely it will cause a great impact on security in the form of a car and daily stability. Therefore, inspection of common clutch breakdowns must be paid close attention, thereby providing safe and reliable protection for the car to run. It focuses on automotive chassis check-fault, fault diagnosis and troubleshooting methods proposed.

Keywords- Automotive ; Automotive Clutch; Troubleshooting; Diagnosis; Repair process card

I. INTRODUCTION

Basic skills of Automotive driving system is transmitted the power of engine to the drive wheels, making the car travel. Clutch is located between the engine and manual transmission to ensure a smooth start car, easy car shift, and prevent transmission overload. Clutch is mainly composed by the active part, driven part, clamping device and the steering mechanism and other components. [1] Thus , the clutch structure is more complex, then a clutch problem and the reason for the fault that caused the error also are more complex, for which staff must have a strong professional knowledge and skills in order to timely and accurately detect the engine failure, and then take effective measures to repair.

II. INTRODUCTION OF ORDINARY CLUTCH OF SANTANA COMMON FAULTS

Ordinary Santana clutch includes the following sections: A. driveline, clutch, transmission, universal gear, main gear box, transmission, axle and so on[2], the composition of clutch is shown in figure 1. Ordinary Santana clutch common faults are: Clutch failure, clutch slipping clutch is not complete, the clutch engagement irregularity, clutch abnormal sound.

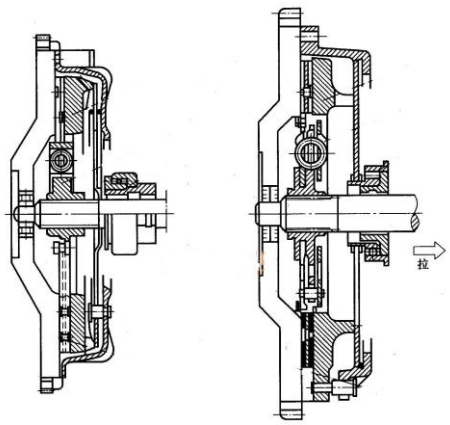

Figure 1. the composition of clutch

III. FAILURE MECHANISM AND DIAGNOSTIC TECHNOLOGY

Ordinary Santana clutch common faults are: Clutch failure, clutch slipping clutch is not complete, the clutch engagement irregularity, clutch abnormal sound.

A. The analysis of Clutch slip

(1) The phenomenon of the analysis

1.At the start, although the clutch pedal is lifted high, the car is not running, until when fully raised, can barely started.

2.Car driving, when the accelerator pedal is depressed, the speed increase is not obvious.

3.W hen the car uphill power shortage, serious clutch has burnt smell.

(2)The analysis of mechanism

1.There is no clutch pedal free travel, often against the release bearing on the release lever, compression spring driven disc cannot be pressed.

2.Clutch cover and flywheel fixing bolts loose, the diaphragm spring or pressure plate deformation, the spring force is too weak.

3.Friction surface stained with oil, hardened rivet head exposed or severe erosion.

4.Hydraulic control mechanism or mechanical rope viscous, release fork harden.

(3)The analysis of Diagnostic process

1.Diagnosis: Start the engine and apply the parking brake, hang low gear, slowly lift the clutch pedal,

gradually increase the throttle start, if the car does not move, do not turn off the engine, which shows the clutch slip.

2. Remedy:

The remedy of clutch slip is shown in figure 2.

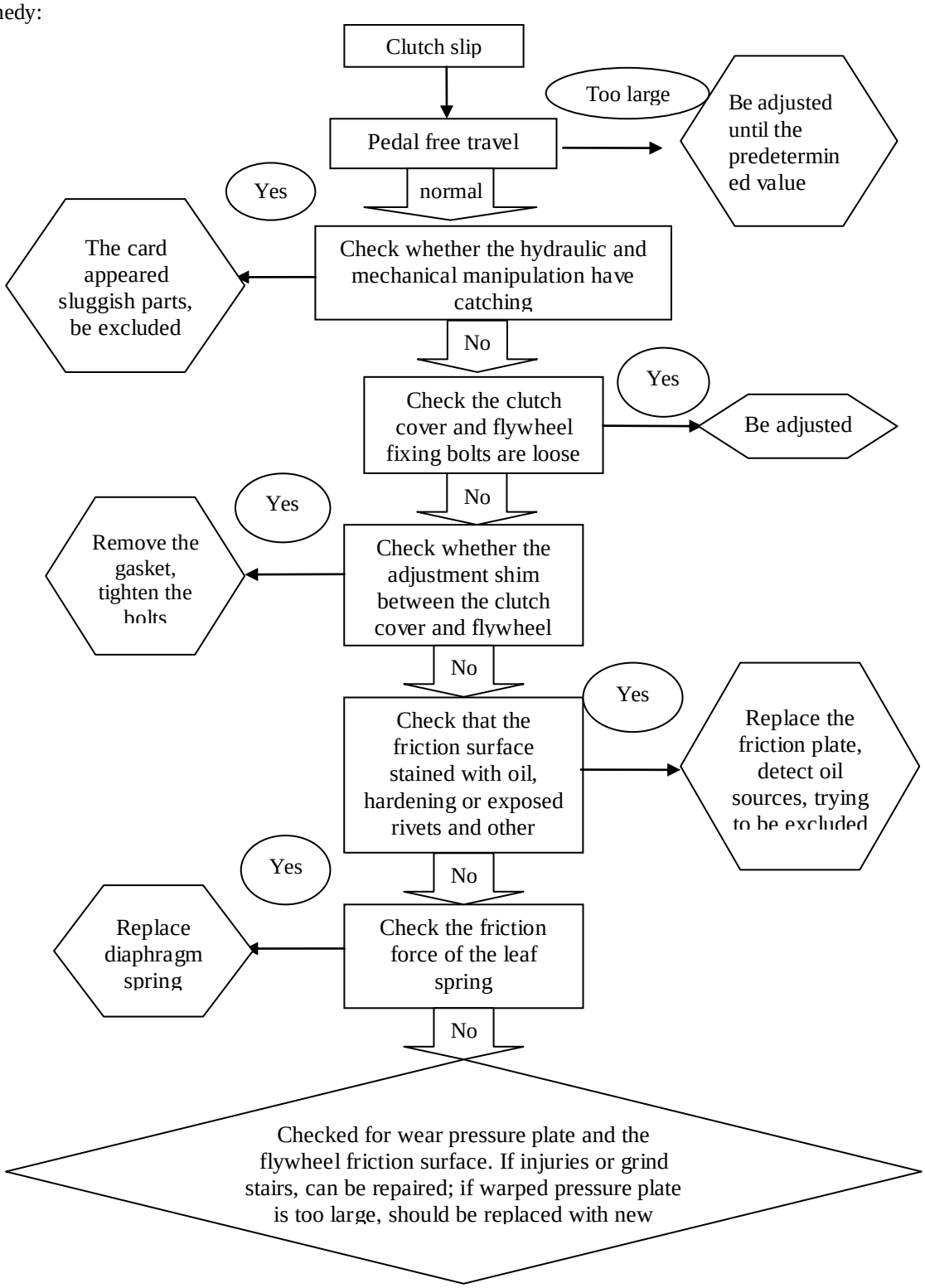

Figure 2. The flowchart of 6 clutch slip

Inspection of technical standards: The height of the clutch pedal should be 130-140mm, pedal free travel is 15-20mm; hydraulic and mechanical manipulation without catching; fixing bolts and flywheel clutch cover no loosening; no adjustment shim between the clutch cover and flywheel; friction plate no piles of oil surface, hardening or exposed rivets and so on; pressure plate and flywheel friction surface without wear.

B. The analysis of clutch release uncomple

(1) The phenomenon of the analysis

1. When the engine is idling, fully depress the clutch pedal, hanging files feel difficult, transmission gear has crash.

2. In gear, ranging from lift the clutch pedal, the car suddenly ran forward or turn off the engine.

(2)The analysis of mechanism

1.The clutch pedal free travel is too large, the working stroke is too small.

2.Driven plate warping uneven, or contaminated with oil, adhesion and the like.

3.New friction plate is too thick.

(3)The analysis of Diagnostic process

1.Diagnosis: Hang the transmission into neutral, depress the clutch pedal, a man with a screwdriver toggle below follower plate. If you can gently struck, indicating the clutch can be separated; if the dial does not move, then the clutch is not complete.

2. Remedy:

The remedy of clutch slip is shown in figure 2.

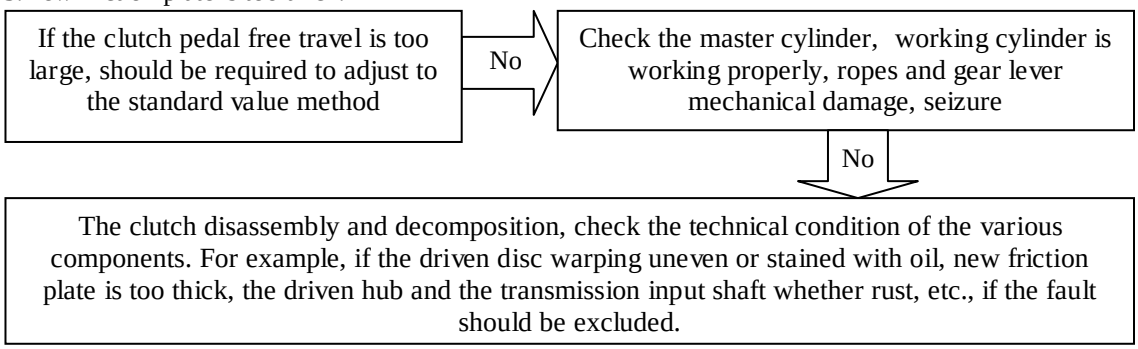

Figure 3. The flowchart of clutch release uncomple

Inspection of technical standards: The height of the clutch pedal should be 130-140mm, pedal free travel is 15-20mm; the inner wall of the cylinder wear no more than 0.125mm, clearance between the piston and the cylinder is not more than 0.20mm; driven disc flat, the driven hub and the transmission input no rust shaft splines.

C. The analysis of irregularity clutch engagement

(1) The phenomenon of the analysis

When the car started, the clutch combination is not stable, so that the body slight jitter.

(2)The analysis of mechanism

1. diaphragm spring or elastic deformation uneven.

2. clutch disc warping torsion damper is uneven or loose. There is oil, the rivet head exposed.

3. friction plate.

4.Hydraulic clutch pedal assembly or manipulation or mechanical manipulation between loose parts, driven plate hub severe wear, the transmission input shaft bent.

5.The engine mounting bolts loose mounting bolts loose transmission and flywheel housing, flywheel mounting bolts loose.

(3)The analysis of Diagnostic process

1.Diagnostic process: (1) Diagnosis: the engine idling, the transmission downshifts, slowly release the clutch pedal is started, such as body shaking, trembling clutch is engaging irregularity.

Inspection of technical standards: When the car started, smooth clutch engagement, the body does not occur slight jitter; hydraulic clutch pedal assembly and handling or mechanical manipulation between no loose parts; follower plate rivet head to the end face of the depth of not less than 0.3mm.

D. The analysis of control Clutch abnormal noise

(1) The phenomenon of the analysis

Clutch is making an unusual noise at work. After this noise are mostly badly worn or damaged parts, mutual collision between the metal caused.

(2)The analysis of mechanism

1.Separate bearing wear, dirt.

2. guide bearing wear, the separation sleeve loose parts.

3.the release fork or gear stuck.

4.clutch return spring to split off, too soft or loose.

5. clutch hub and the transmission input shaft Spline badly worn.

(3)The analysis of Diagnostic process

1.Diagnostic process: When the clutch is engaged, or pressing the pedal a little, or in the course of the clutch pedal, if the clutch paymaster, then the clutch abnormal sound.

2. Remedy:

Process card	Scope		Failure phenomenon
	Ordinary Santana		Clutch abnormal noise
Steps	Repair Methods		
When the clutch is engaged, or press the pedal a little	If hair ring clutch, clutch bearings due cause damage or dirty. If damaged, replace with new bearings. When the clutch is engaged if hair ring, may be separated sleeve loose parts, clutch hub and the transmission input shaft wear due to severe, according to the need for maintenance or replacement.		
In the course of the clutch pedal	If the hair ring clutch, you should check whether the release fork and gear jammed, if so, should be repaired.		
design	Check	Units	Remark

Figure 4. The flowchart of 6 clutch slip

Inspection of technical standards: The height of the clutch pedal should be 130-140mm, pedal free travel is 15-20mm; hydraulic and mechanical manipulation without catching; fixing bolts and flywheel clutch cover no loosening; no adjustment shim between the clutch cover and flywheel; friction plate no piles of oil surface, hardening or exposed rivets and so on; pressure plate and flywheel friction surface without wear.

IV. CONCLUSIONS

The structure is very complex automobile clutch as an important component of the car, in the course of the summary is inevitable because of this reason that two live failure, thereby affecting the car's safety and normal operation. This article lists common automobile clutch slipping clutch, clutch is not complete, Clutch ring true, clutch abnormal sound, and analyze a variety of fault repairs ideas and processes. Of course, in addition to these failures, there are other faults, which require careful examination staff, pinpoint cause of the malfunction, ensure the clutch is normal, and then to provide protection for safe driving a car.

REFERENCES

[1] Lv Jian and Lin Luan. Structure and Overhaul of Automobile Chassis [M]. Shanghai: electronic industry press. 2012.

[2] Wang Wangyu. Automotive design [M]. Beijing: Machinery Industry Press. 2011.

[3] Su Zijian. Multidisciplinary design optimization of decomposition, synergy and uncertainty study [D]. Wuhan: huazhong university of science and technology. 2008.

[4] Lin Shiyu. Design and manufacture of diaphragm spring and disc spring clutch [M]. Harbin: Harbin industrial university press. 2010.

[5] Yan Chunli,Zhang Xidong. Design and manufacture of diaphragm spring and disc spring clutch [J].Forestry machinery and woodworking equipment

[6] Lin Mingfang. Design and manufacture of diaphragm spring and disc spring clutch [J]. automobile engineering.2003

[7] JiGuoHua, li yan, wen-qiang li, etc. A multidisciplinary design optimization method for complex system [J]. Journal of mechanical design and research of 2011.27 (4) : 6-11.

[8] XiaoMi. Approximate in multidisciplinary design optimization model and solution strategy research [D]. Wuhan: huazhong university of science and technology. 2012.

[9] Xue Lipeng. Tilt rotor machine pneumatic/dynamics multidisciplinary design optimization research [D]. Nanjing: nanjing university of aeronautics and astronautics. 2011.

[10] JiaoLiMing. Multidisciplinary design optimization theory in the application of parallel mechanism [D]. Zhengzhou: zhengzhou university. 2012.

[11] NieYongJun, wiseman. Multidisciplinary design optimization technology and its application study [J]. Mechanical and electrical product development and innovation, 2011.24 (1) : 4 - 6.