Construction Costs and Transmission Efficiency Comparison of AC and DC Distribution System

Xiaodong Yuan[1, a],Dan Liu[1, b] and Qiang Li[1, c]

[1]State Grid Jiangsu Electric Power Company, Nanjing 211103, China;

[a]387624995@qq.com, [b]158269975@qq.com, [c]914444125@qq.com

Keywords: DC distribution system, AC distribution system, Economy comparison, Construction costs, Transmission loss rate.

Abstract. According to the DC and AC distribution system with the classified load, the maximum transmission capacity is calculated. The price of the main devices in the distribution system including DC breaker, DC converter, etc. is analyzed. Taking the proposed 10kV AC, ±7.5kV DC and ±15kV DC distribution system for example,the economic comparison for AC and DC distribution system is analyzed considering their construction costs and transmission loss rate. The result shows that both the maximumtransmission capacity and construction costs of DC distributionnetwork is higher than those of AC distribution system, and the higher the voltage level, the larger the maximum transmission capacity and the construction costs will be. And the transmission loss rate of DC distribution system is significantly lower than AC, and the higher the medium voltage DC load ratio is, the lower the rate of transmission loss will be.

1. Introduction

With the rapid development and wide application of new energy, new materials, and the increasing urban demand of load, the demands of power stability, efficiency and economy increase rapidly.The development of DC distribution system is for several reasons: Firstly, the renewable energy such as solar photovoltaic and fuel cell are running in DC as well as the electric vehicle. Secondly, it is more convenient and energy saving for houseequipment, such as computer, printer, microwave, washing machine, inverter air conditioner and so on. Thirdly, under the demand of energy restructuring, there must be a lot of energy storage power station and electric vehicle connecting to distribution network, leading to a great challenge to urban distribution network.

According to the foreign research, compared with the AC distribution, DC distribution system shows a better performance in transmission capacity, controllability and power quality [1-7]. Therefore, the DC distribution system has huge market potential and economic value.

The paper makes the economy comparisonfor DC with AC distribution system in the same voltage level, considering the indexes of maximum transmission capacity, major equipment costs and transmission efficiency.

2. The load and topology of DC and AC distribution system

2.1 Topology of DC and AC distribution system

The economy comparison of DC and AC distribution system is analyzed with the same radial topology, as are shown in Fig.1 and Fig.2.The equipment of AC distribution system contains substation, AC breaker, AC cable, AC transformer and the rectifier for suppling DC load. DC distribution system is connected with AC transmission network by converter station, and the DC equipment contains converter station, DC cable, DC breaker, DC transformer and the inverter for suppling AC load.

2.2 Load classification inDC and AC distribution system

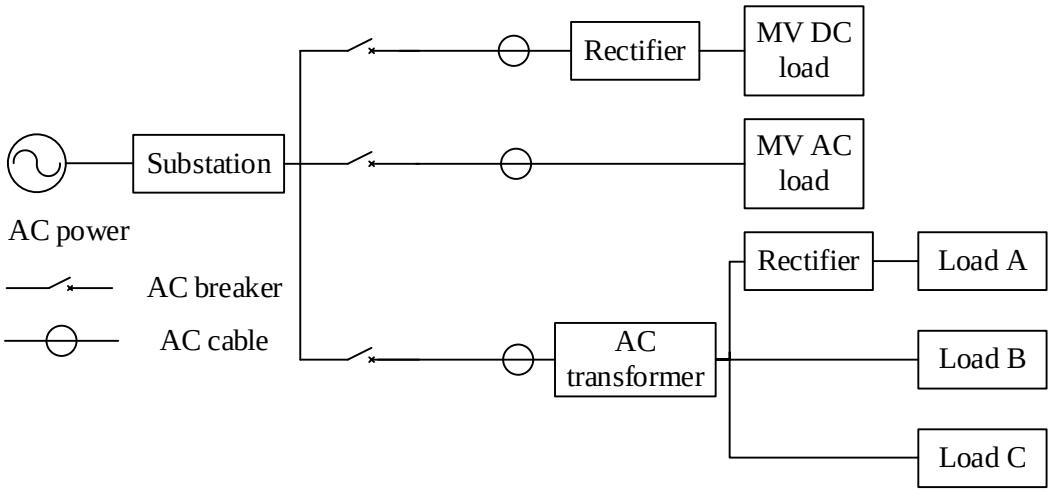

Fig. 1 AC distribution system

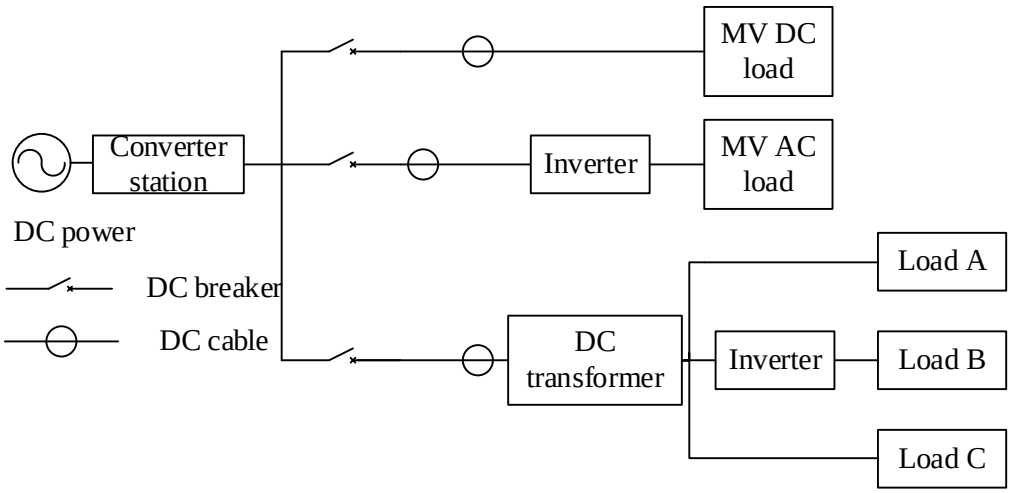

Fig. 2 DC distribution system

Where load A is LV AC load, load B is LV DC load and load C is resistive loadwhich can be supplied by both AC and DC distribution system.

The load data fromAmerica 2001 shows that in LV distribution network A, B, C load percentage are 31.4%, 52.6% and 16%. Recently, because of the increasing applications of inverter air conditioner, computers and so on, the ratio of DC load increases compared with 2001. Assuming the ratio of 3 types ofLV load are 50%, 40% and 10%, and the voltage level and the capacity of load are shown in Table 1. And the length of each distribution cable is l=2.5km.

Table. 1 Loads of AC and DC distribution system

Loads		Voltage level	Power（MW）
MV side	AC load	10kV（AC）	2.0
	DC load	±7.5kV（DC）or ±15kV（DC）	3.0
LV side	Load A	±200V（DC）	0.5
	Load B	220V（AC）	0.4
	Load C	/	0.1

3. Economic comparison of AC and DC distribution system

3.1 Construction costs

1) The costs of converter station and substation

Converter station contains AC transformers, AC filters, converter, and DC capacitance, etc. According to the construction experience of the existing HVDC, the costs of converter station

isabout 1000 yuan/kW [9-10].The costs ofAC substation can be considered as 300 yuan/kW [10].

2) The costs of AC and DC cable

Because the insulation requirements of DC voltage is lower than AC voltage, the cost of DC cable is cheaper than AC. Generally, at the same level of insulation, the cable can withstand a 1.5 to 2 times DC voltage of, so the AC cables can therefore be used for DC grid [11]. The costs of bipolar DC cable is considered 2 times with single-phase AC cable [12].

3) The Costs of AC and DC breaker

Take the hybrid DC breaker for example, the components include high repulsion switch, power electronic switch and control equipment [13]. Assumingthat after the commercial application of DC breaker, its market price is 1/2 of research and development (R & D) costs, the price of each ±7.5 kV and ±15 kV DC breaker is about 450,000 yuan, and 700,000 yuan.The costs of each AC break is about 20,000 yuan [14].

4) The costs of AC and DC transformer

Full-bridgeDC transformer, for example, consists of power electronic switching, high-frequency transformer, etc. [15].Assuming that after the commercial application of DC transformer, its market price is 1/2 of R & D costs, the price of each ±7.5 kV and ±15 kV DC transformer is about 500,000 yuan, and 850,000 yuan. The costs of each 1 MW AC transformer is about 150,000[16].

5) The costs of inverter and rectifier

The costs of rectifier and inverter vary widely depending on their capacity, compared with MV distribution network the costs is much cheaper in LV distribution network. So the costs ofLV rectifier and inverter are not involved in the investment costs.

The MV rectifier and inverter is used for the power supplying of MV DC and AC load, and its costs is assumed to be 800 yuan each kW.

6) The construction costs for AC and DC distribution system

The construction costs for AC and DC distribution system is shown in Table 2.

Table.2 Statistical list of construction costs for AC and DC distribution system

Name	AC			DC（±7.5kV）			DC（±15kV）		
	Price	Number	Total/ 10000 yuan	Price	Number	Total/ 10000 yuan	Price	Number	Total/ 10000 yuan
Substation/ Converter station	300yuan /kW	6MW	180	1000yuan /kW	6MW	600	1000 yuan /kW	6MW	600
AC/DC cable	330 yuan/m	2.5km	82.5	150 yuan /m	2.5km	37.5	100 yuan/m	2.5km	25
	400yuan /m		100	220 yuan/m		55	100 yuan/m		25
	200 yuan /m		50	100 yuan /m		25	100 yuan/m		25
AC/DC breaker	20000	3	6	450000	3	135	700000	3	210
AC/DC transformer	150000	1	15	500000	1	50	850000	1	85
Rectifier/ Inverter	800 yuan /kW	3MW	240	800 yuan /kW	2MW	160	800 yuan /kW	2MW	160
Total			637.5			1062.5			1130

3.2 Transmission loss rate

1) Transmission efficiency of DCand AC converter

According to the results of the survey, the efficiency ofMV and LV rectifier is 95% and 90% and the efficiency of MV and LV inverter is 97% and 93%, and the efficiency of DC transformer is 90%, and the efficiency of DC converter station and AC transformer can reach to 98.4% and 98%[2-9].

2) Transmission efficiency of DCand AC cable

Considering the dielectric loss and magnetic induction loss of AC cable, the loss of AC cable can be calculated by [8]:

$$\frac{P_{ACloss}}{P_o} = \frac{0.018\sqrt{6}J(1+k)l}{U_{AC}} \tag{1}$$

Where, P_{ACloss} is the active power loss of AC cable, P_o is thetransmission power of the end of AC line, J is the current density, A/mm^2, k is the extra loss coefficient of AC cable, l is cable length, km, U_{AC} is the virtual value of line voltage, kV. Assuming the AC cable is made of copper insert with the resistivity of $18\Omega \cdot mm^2/km$.

The loss of DC cable can be calculated by (2):

$$P_{DCloss} / P_o^{'} = 0.036Jl / U_{DC} \tag{2}$$

Where, P_{DCloss} is the active power loss of DC cable, $P_o^{'}$ is thetransmission power of the end of DC line, U_{DC} is the DC line voltage, kV. Assuming the resistivity of DC and AC cable are the same.

3) Transmission loss rate of AC and DC distribution system

In the AC distribution system shown in Fig.1, the current density $J = 2\ A/mm^2$ [12].Cable length l=2.5km, U_{AC}=10kV,and extra loss coefficient k=1[8]. In the DC distribution system shown in Fig.2, U_{DC}=15kV or 30kV.

From (1) and (2), the transmission efficiency of AC and DC system is 95.6%, 98.8% (±7.5kV) and 99.4(±15kV). The result is shown in Table 3, and the transmission loss rate is calculated by (3).The loss rate of AC and DC distribution system are 11.7%, 6.38%(±7.5kV) and 5.7%(±15kV).

$$\eta = (P_s - P_l) / P_l \tag{3}$$

Table.3 Transmission efficiency of AC and DC distribution system

Loads	Power /MW	Transmission efficiency/%			Power supply/MW		
		AC	DC（±7.5kV）	DC（±15kV）	AC	DC（±7.5kV）	DC（±15kV）
MV AC load	2.0	93.7	94.3	94.9	2.134	2.121	2.107
MV DC load	3.0	89.0	97.2	97.8	3.371	3.086	3.067
Load A	0.5	82.6	87.5	88.0	0.605	0.571	0.568
Load B	0.4	84.3	81.4	81.9	0.474	0.491	0.488
Load C	0.1	84.3	87.5	88.0	0.119	0.114	0.114
Total	6.0	/	/	/	6.703	6.383	6.344

3.3 Economic comparison of AC and DC distribution system

From the previous analysis, the economic comparison is shown in Table 4.

Table.4Parameters of economic comparison forAC and DC distribution system

Name	Construction costs	Transmission loss/%
AC	673.5	11.70
DC（±7.5kV）	1062.5	6.38
DC（±15kV）	1130.0	5.70

The total costs are:

$$C = F + \eta n P_{av} Sh \tag{4}$$

Where, C is total construction costs, 1000 yuan, F is investment costs, 1000 yuan, η is transmission loss rate, n is the operating years of system, a, P_{av} is the annual average load, MW, S is the electricity price, yuan/kW·h. Let P_{av}=4MW, the total construction costs of AC system are:

$$C_{AC} = 637.5 + 287n \tag{5}$$

The total construction costs of ±7.5kV and ±15kV DC system are：

$$C_{DC1} = 1062.5 + 156.5n \quad (6)$$

$$C_{DC2} = 1130 + 139.8n \quad (7)$$

As we cancalculate, within 3 years the costs of AC system are the lowest, 3~4 years ±7.5kV DC system are the lowest, and more than 4 years ±15kV DC system are the lowest.

4. Summary

The economic comparison of AC and DC distribution system is studied in this paper. The construction costs and transmission loss rate are considered, and having following conclusions:

1) The maximum transmission capacity of DC distribution system is significantly larger than AC, and the higher the voltage level, the larger the maximum transmission capacity will be.

2) In the same transmission capacity and network topology, the construction costs of DC distribution system is higher because of the expensive price of electronicdevices.But with the rapid development of power electronics technology and the price decline of power semiconductor devices, there is a big price cut of DC distribution system.

3) According to the current power electronics efficiency, the transmission loss rate of DC distribution system is significantly lower than AC, and with the increasing of DC load and the development of power electronics technology the transmission loss rate of DC distribution system will be even lower.

4) The higher the MV DC load ratio is, the lower the construction costs of DC distribution system, and the lower the rate of transmission loss will be.

References

[1]Hammerstrom D J. AC versus DC distribution systemsdid we get it right?[C]//Power Engineering Society General Meeting, 2007. IEEE. IEEE, 2007: 1-5.

[2]Starke M, Tolbert L M, Ozpineci B. AC vs. DC distribution: A loss comparison[C]//Transmission and Distribution Conference and Exposition, 2008. T&# x00026; D. IEEE/PES. IEEE, 2008: 1-7.

[3]Starke M, Li F, Tolbert L M, et al. AC vs. DC distribution: maximum transfer capability[C]//Power and Energy Society General Meeting-Conversion and Delivery of Electrical Energy in the 21st Century, 2008 IEEE. IEEE, 2008: 1-6.

[4]Dastgeer F, Kalam A. Efficiency comparison of DC and AC distribution systems for distributed generation[C]//Power Engineering Conference, 2009. AUPEC 2009.Australasian Universities. IEEE, 2009: 1-5.

[5]Sithimolada V, Sauer P W. Facility-level DC vs. typical ac distribution for data centers: A comparative reliability study[C]//TENCON 2010-2010 IEEE Region 10 Conference. IEEE, 2010: 2102-2107.

[6]Nilsson D, Sannino A. Load modelling for steady-state and transient analysis of low-voltage dc systems[C]//Industry Applications Conference, 2004. 39th IAS Annual Meeting.Conference Record of the 2004 IEEE. IEEE, 2004, 2: 774-780.

[7]Techakittiroj K, Wongpaibool V. Co-existance between AC-distribution and DC-distribution: in the view of appliances[C]//Computer and Electrical Engineering, 2009. ICCEE'09.Second International Conference on. IEEE, 2009, 1: 421-425.

[8]Wang F, Pei Y, Boroyevich D, et al. Ac vs. dc distribution for off-shore power delivery[C]//Industrial Electronics, 2008. IECON 2008.34th Annual Conference of IEEE. IEEE, 2008: 2113-2118.

[9]Kaipia T, Salonen P, Lassila J, et al. Possibilities of the low voltage DC distribution systems[C]//Nordac, Nordic Distribution and Asset Management Conference. 2006: 1-10.

MLA