Automotive Mechanical Braking and Stability Control based on the Secondary Braking System

Zongqi Yuan[1, a *]

[1]Guizhou Polytechnic College of Communications, Guiyang, Guizhou 550000, China

zongqi_yuan@163.com

Keywords: Auxiliary braking system; Simulation; Electric vehicles; Regenerative braking; Vehicle stability.

Abstract. In this paper, the auxiliary brake system vehicle stability control experiments using Mat lab/Simulink to build the simulation system dynamics associated auxiliary braking system and the actual vehicle system. In the trajectory of the vehicle and the vehicle sideslip angle characterizing the vehicle condition, using the integrated stability control braking and driving strategies, respectively, the actual vehicle system and test system with an auxiliary braking system in two test conditions under stability control performance analysis and validation. And then to verify the validity of the secondary braking system of the vehicle stability control, and in the absence of control or ESP control system failure can effectively assist the vehicle; and when the ESP control system with the performance of the actual vehicle stability control system in both test conditions have remarkable consistency. At the same time, the auxiliary braking system as a car with stability control test device is designed scientific and feasible.

Introduction

Automotive Electronic Stability Control Performance (ESP) test is a stability control system development and stability necessary means to control the car in the performance test, at home and abroad in this field has been a lot of research work; get more research [1, 2]. Common research tools and methods are experimental research test bed simulation studies and independent research test vehicle. Computer simulation is a method widely used in the initial research and development, testing and independent vehicle test station detects the vehicle stability control studies are widely available, the development process is the essential part, it can truly reflect the actual effect of the vehicle stability control [3-6]. Experimental study on independent vehicle stability control in a variety of complex conditions need be, due to natural conditions, safety conditions, test sites and other restrictions, thus there is a high degree of risk, long test cycle, the input costs and other issues. Major foreign manufacturers generally have a huge body of research and more costly professional testing ground [7]. Nevertheless, it is still relatively long development cycle, such as Bosch's automotive ESP system from research and development to mature after 10 years of time, to more than 20 years' experience of large-scale application of the time [8].

Independent vehicle test current vehicle stability control based mostly passive safety, active safety rarely use the auxiliary brake control precautions. For less than the current vehicle stability control pilot study, the study proposed based on the vehicle auxiliary braking system stability test research, create a system dynamics model. Selected as a test car models, based on Mat lab/Simulink to establish its associated dynamics simulation system based on secondary braking system and the actual vehicle system, respectively, of the actual vehicle braking systems and auxiliary test systems based on the under steer, two kinds of test conditions stability control performance were analyzed. Hybrid vehicles and electric vehicles motor brake fast response, enabling regenerative braking, but provides a smaller braking torque, braking torque is controlled by the wheel speed, the motor base speed, charging the energy storage system capacity and other factors the impact is often difficult to bear alone vehicle braking task that requires joint work with the conventional hydraulic brake, hydraulic brake as a supplement.

System Structure

Auxiliary braking system (hereinafter referred to as the secondary system) as shown in Fig. 1, the left and right auxiliary wheels, brakes around, left and right axle, bracket and connecting means. Connecting device (see Fig. 2), by a vertical pin, the pin level, torsion spring, vehicle webs and angle sensors, the upper end of the torsion spring and the vertical pin fixedly connected, and the lower end of the torsion spring fixedly connected vehicle webs, vertical pin constitute a vertical axis of the vehicle hinge webs. Left and right auxiliary wheels mounted on both sides by about axle bracket and the test vehicle wheel contour. When the vehicle tends to instability of dangerous working conditions can be controlled to produce about brake active braking torque acting through the pin, the torsion spring webs and vehicle control intervention effect on the body, the vehicle back to the stable running state [9, 10].

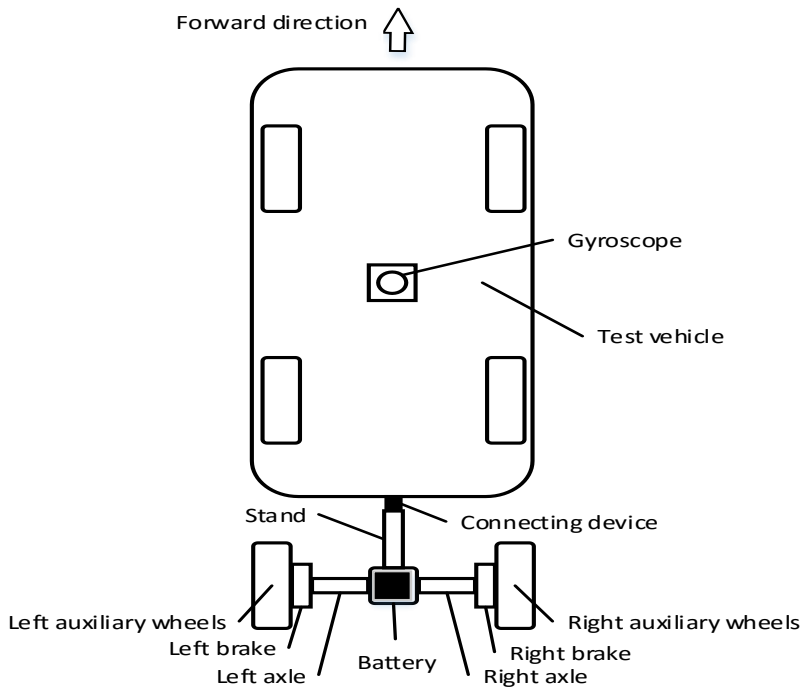

Figure 1. Auxiliary braking system

Through the wheel and the auxiliary wheel speed signal, the front wheel steering angle and longitudinal velocity gyro signal measure at the center of each wheel and the vehicle's center of mass, velocity and lateral slip angle and other vehicle motion parameters; the same time, through the corner apparent torsion spring deflection sensor.

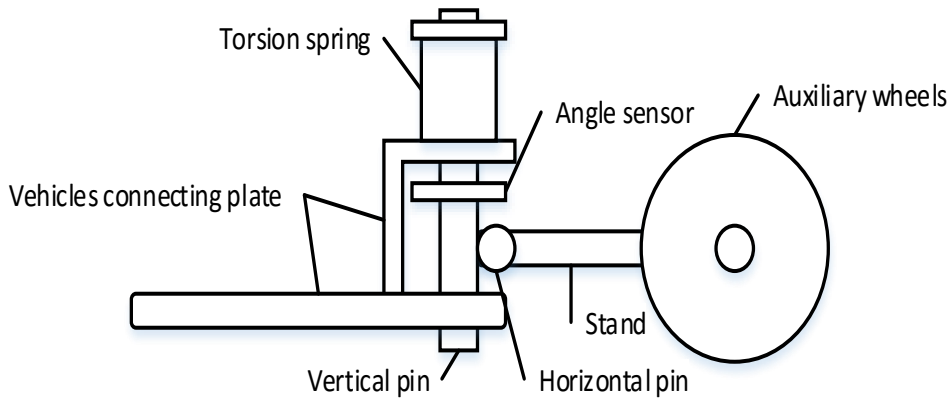

Figure 2. Connecting device

Left and right wheel brake assist system assists with car uses the same wheel, same wheelbase and rear auxiliary wheel wheelbase; designed to calculate the auxiliary braking system connected to the rear of the center of mass from the level at the distance Lm = 0.8m. Kinetic model-assisted braking system as follows:

$$(F_{lx} - F_{rx})\frac{B_r}{2} - (F_{ly} + F_{ry})L_m - T_m = \omega_{aid} I_m \tag{1}$$

Tread Br-wherein two auxiliary wheels, mm; inertia brake assist system, kg.m2; The rotation angular velocity aid- auxiliary braking system may be utilized to obtain angle sensor, rad/s.

Auxiliary Braking System Test Strategy

Auxiliary braking system test strategies (see Fig. 3) layered integrated control method, the top-level master control module control system according to the vehicle stability requirements and vehicle driving conditions, the underlying real-time call control module ABS expected to achieve its objectives. Upper body control state controller, the controller door was threshold. About the auxiliary wheel active brake control experiment using time-ESP controller input controller for the vehicle slip angle β0 want quality psychological and actual sideslip angle β error value Δβ, the output of the auxiliary wheels around target slip rate ScL, ScR, when | Δβ | <c when, where c is the threshold, ScL = 0, ScR = 0; when Δβ> c, in order to understeer, ScL = S0L, ScR = 0; when Δ β <-c, is excessive steering, ScL = 0, ScR = S0R; sharing ESP brake controller is controlled by the brake control according to the ABS controller ScL, ScR, avoid vehicle instability.

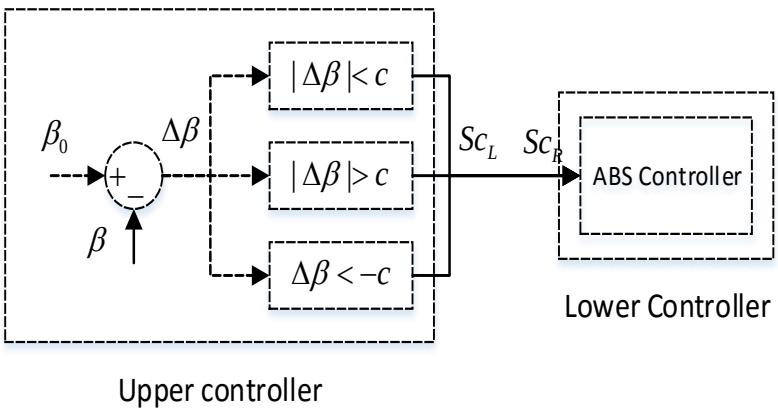

Figure 3. Active Brake Control Test Strategy

Results and Discussion

To verify the auxiliary braking system with stability control performance, establish auxiliary braking system dynamics simulation system based on Mat lab/Simulink, adding parameters to the car as the vehicle stability control system of the system parameters, set up auxiliary braking system and the actual vehicle dynamics simulation system associated systems. Vehicle dynamics model by the engine model, transmission model, tire model, ABS model, and ASR and ESP model components. Respectively, in the two test conditions of the actual vehicle test systems and vehicle stability assist system based braking system (referred to as the test system), test analysis and verification ESP control performance.

In under steer, over steer test conditions, there were, no ESP stability control system controls the actual vehicle test study, to adjust the ESP control strategy enables the actual vehicle neutral steering system for good performance; based on the same test conditions, in under steer, over steer test conditions, there were, no ESP stability control test system performance analysis. As the vehicle

centroid slip angle and trajectory can directly reflect the state of the vehicle, so the use of both vehicle stability controls to measure the effect. Under conditions of the vehicle under steer centroid slip angle and trajectory was shown in Fig. 4.

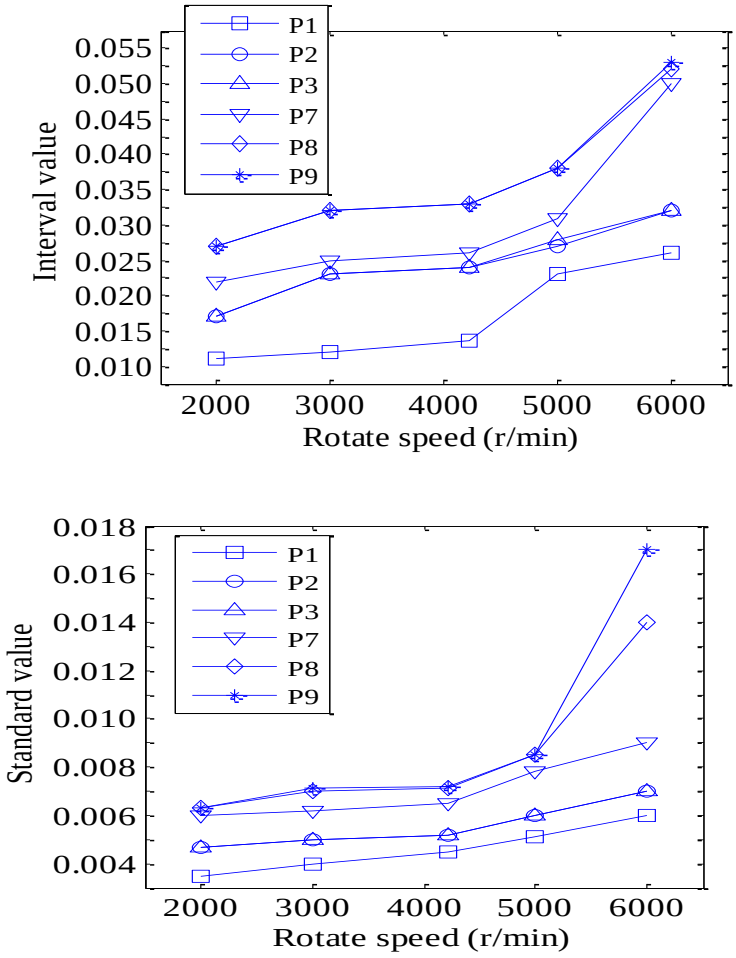

Figure 4. Under conditions of the vehicle under steer centroid slip angle and trajectory

Comprehensive analysis shows that in under steer, over steer two typical conditions, the absence of control ESP, brake assist system based on the system than the actual vehicle test systems have a tendency to become neutral steering; have ESP control, two system with complete consistency; auxiliary braking system, in the absence of control or ESP failure, the brake play a proactive role in the stability of the vehicle had significant control effect, ensure that the ESP control the vehicle when there is a vehicle test security instability when the vehicle.

Summary

In order to improve the security of real vehicle test proposed assisted braking system, stability control fitted to the car, for example, to build simulation system dynamics associated auxiliary braking system and the actual vehicle system based on Mat lab / Simulink. Auxiliary brake control experiment using hierarchical ESP control strategy; respectively, the actual vehicle braking systems and vehicle stability assist system test in under steer, over steer two typical experimental conditions stability control performance analysis and validation. Studies show that the proposed assisted braking systems for control of Automobile ESP performance principle feasible, safe and efficient, meet the ESP control vehicle performance test needs and overcome performance tests usually cars ESP control risk, long cycle, high cost insufficient.

References

[1] Wu M, Nakano M, She J H.A distributed expert control system for a hydrometallurgical zinc process. Control Engineering Practice, 1998, 6(12): 1435-1446.

[2] Liau L C-K, Yang T C-K, Tsai M-T. Expert system of a crude oil distillation unit for process optimization using neural networks. Expert System with Applications, 2004, 26 (2): 247-255.

[3] Babuska R, Verbruggon H B, Ban can H J L. Fuzzy modeling of enzymatic penicillin-G Aversion. Engineering Application of Artificial Intelligence, 1999, 12 (1): 79-72.

[4] Xiao W, Weidemann B. Fuzzy modeling and its application to magnetic bearing systems. Fuzzy Sets and Systems, 1995, 73(20): 20-217.

[5] Lee Chang Jun, Prasad Binay, Lee Jong Min. Stochastic nonlinear optimization for robust design of catalysts. Industrial and Engineering Chemistry Research, 2011, 50 (7): 3938-394.

[6] Y. Zhao, W. Wei, X.J. Tang, M.L. Zhao, and Choice of Optimized Scheme Parameters of Neural Networks Based on Error Handling, AISS. 17(2012)76-82.

[7] Boggs P T, Tolle J W. Sequential quadratic programming for large-scale nonlinear optimization. Journal of Computational and Applied Mathematics, 2000, 124(1): 123-137.

[8] Berger M, Cote O, Chebak A. Development of a DC-link protection system for regenerative braking of Electric Vehicle using a pseudo-cascade controlled IGBT chopper[C]//Transportation Electrification Conference and Expo (ITEC), 2015 IEEE. IEEE, 2015: 1-7.

[9] Ho H P. The Influence of Braking System Component Design Parameters on Pedal Force and Displacement Characteristics. Simulation of a passenger car brake system, focusing on the prediction of brake pedal force and displacement based on the system components and their design characteristics [D]. University of Bradford, 2015.

[10] Wang B, Huang X, Wang J, et al. A robust wheel slip ratio control design combining hydraulic and regenerative braking systems for in-wheel-motors-driven electric Vehicles [J]. Journal of the Franklin Institute, 2015, 352(2): 577-602.