Application of fluid pressure energy recovery technology in the seawater desalination system

Lan-xiang HOU[1, a], Zhen YAN[1, b]

[1]School of Mechanical and Electrical Engineering, Zaozhuang University, Zaozhuang 277160, China

[a]hhhlx1234@163.com, [b] lzlgyz@yeah.net

Keywords: Seawater desalination; Pressure energy recovery; Rotary Pressure exchanger

Abstract: With the fresh water crisis coming， people all around the world put their eye on the seawater desalination. " Asking the ocean for freshwater", has become a common choice in many countrys,which means seawater desalination becomes an important way to solve the problem of freshwater. A lot of high energy was wasted in the process of seawater desalination.If the high voltage is removed from waste fluid in the energy recycling, it can reduce energy consumption and production cost savings, improve the economic benefit meanwhile. In a variety of stress recycling equipments, rotary pressure exchanger based on the principle of positive displacement has been widely used in the system of seawater desalination due to energy recovery efficiency.

Introduction

On the earth, fresh water for human is only 1% of the total water resources,which is still uneven distribution.With the development of the economy and the increase of the population, human demand for more and more fresh water. With the global becoming warm, "el nino" and "la Nina" leapfroging,the precipitation inhomogeneity was exacerbated .Drought has became in some countries and regions.The situation of fresh water supply become very grim[1]. Due to the technology of seawater desalination emergence, use of seawater and brine directly was possible,which provides a effective way for human to solve the water crisis. By 2006, the seawater desalination technology has been applied in more than 120 countries and regions, and The daily production of desalinated water global is 37.75 million tons, which has solved the problem of water supply for more than 100 million people, which means about 1/50 of the world's population depend on the seawater desalination. Desalination has become the important water source incremental technology,and made a huge contribution in solve- -ing to the global water crisis[2].

Summary Of seawater Desalination Method

At present, the seawater desalination methods mainly include freezing, solar desalination, low-temperature multi-effect distillation desalination, multi-stage distillation, electrodialysis , dew point evaporative and reverse osmosis, etc. All of these methods, reverse osmosis with its simple equipment, easily to be maintenanced and having modularity equipment , occupy the market quickly, and became the most widely used method[3]. Reverse osmosis desalination system process flow diagram is shown in figure 1. Fresh water was pumpped to the working pressure by high-pressure. The fresh water was prepared through a semipermeable membrane’s reverse osmosision.When the concentration reaches a certain value, the permeation rate decreases, and

strong brine was discharged from the system by the subsequent fresh water. At this time ,the press can reach 5.5-6.0MPa, if it was discharged directly without treatment, the pressure will be wasted. If the high pressure of strong brine can be recycled efficiently, the system's energy consumption will be lower. That can improve the economic benefit greatly [4].

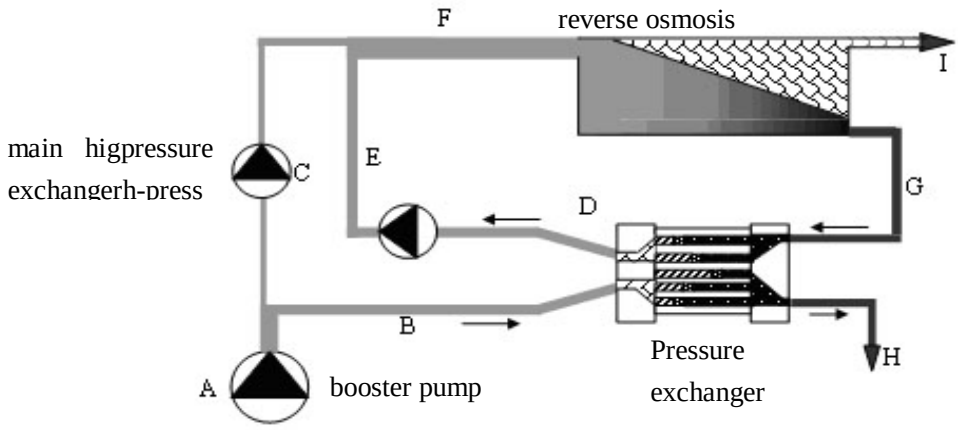

Figure 1 desalination system process flow diagram

Fluid Pressure Energy Recovery Technology and Device

In many technological process of industrial production, the fluid energy transfer process can be denoted in figure 2.

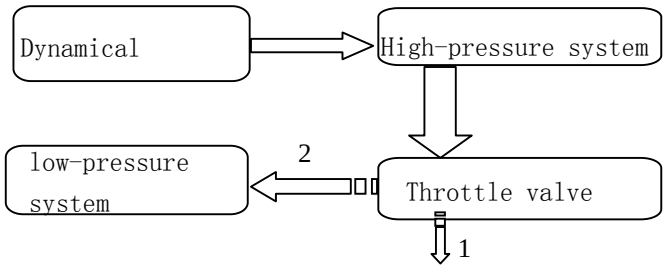

Figure 2 Fluid flow chart of the energy transfer

Power system including motor , pump and other power facilities. Low pressure fluid was transferred to high pressure system after increasing pressure by the power system, in which,it complete reaction,mass transfer and other process. Finally the fluid was let out directly or flowed back in low pressure systems through the pressure relief device pressure of throttle. Arrow1 in the figure 2 shows a typical example of reverse osmosis desalination,in which the high pressure liquid was discharged directly, and the waste concentrated brine pressure can reach 5.5-6.0 MPa. Arrow 2 means waste recycling.If the high pressure in the discard fluid can be recycled, can reduce the energy consumption can be reduced ,the cost can be saved, and the economic benefit can be improved.

At present, the energy recovery technology used in seawater desalination system, its working principle are mainly two:the type of turbine and the type of positive displacement [5]. Turbine energy recovery technology using concentrated brine with high pressure drived the pump, though energy transfering, pressure to mechanical energy to pressure, complete the pressure energy transfer.Its energy recovery rare is between 35 ~ 76% generally. Positive displacement energy recovery technology using high pressure fluid incur pressure low pressure fluid directly, without any auxiliary equipment.The pressure can be transferred directly from the high pressure fluid to the low pressure fluid, which reduced the the intermediate links of energy conversion, and energy recovery efficiency was increased greatly, generally between 91 ~ 96%.There are two kinds of turbine energy

recovery device , TurboCharger made in PEI of USA and ERT of Switzerland.The working type of Positive displacement energy recovery device is divided into two kinds ,piston and rotary, and the representative of the piston type products is the WEER pressure switches of DesalCo company, rotary in representative products is the PX type of pressure switch of the PEI company's [6].

The hydraulic turbine energy recovery device (TurboCharger)

Hydraulic turbine energy recovery device was made in the 1980s, which is one of the earliest technology applicated in the energy recovery of desalination system. The energy transfer process is shown in figure 3[7].

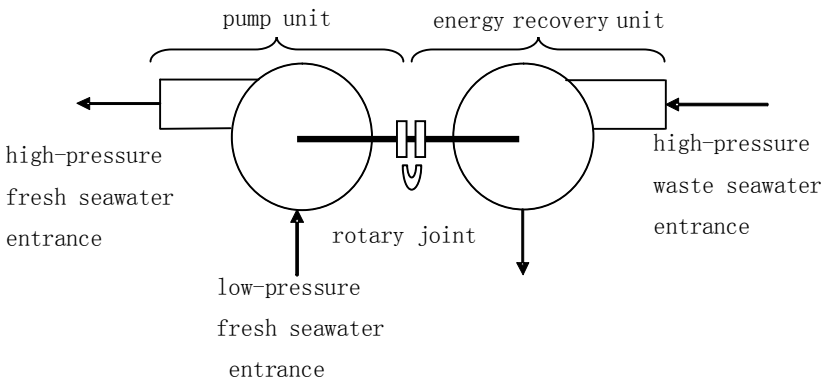

Figure 3 Energy transfer of the energy recovery device in TurboCharger

Hydraulic turbine energy recovery device connected the hydraulic turbine and pump using a coupling shaft. High-pressure strong brine from reverse osmosis system drive the turbine rotor, which pump rotates, and increases pressure of the feed water. After two step conversion process " pressure energy - mechanical energy - pressure energy ", the device can complete the pressure from high voltage transmission of the concentrated brine to the low pressure of feed water[8]. The whole process was provided energy by the strong brine completely, without any electricity. As the energy recovery's efficiency was increased with the increase of water flow,it is suitable for application in large capacity water desalination system.

Pelton Wheel energy recovery device

Pelton Wheel energy recovery device is one of the earliest energy recovery technology applicated in the desalination system,which working process as shown in figure 4[9].

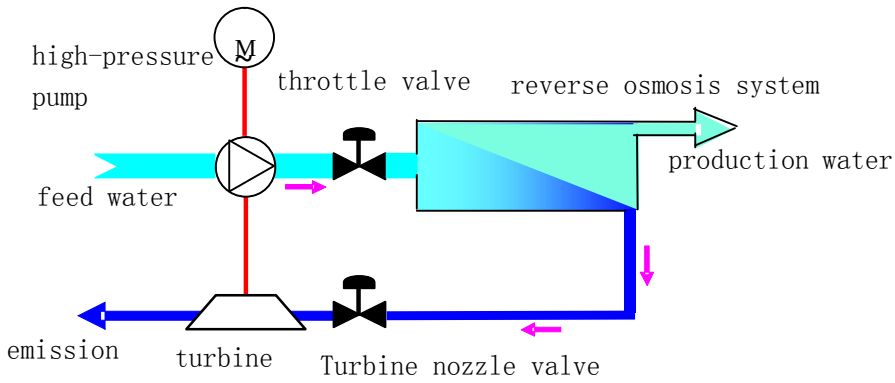

Figure 4 The flow chart of energy recovery device in Pelton Wheel

Pelton Wheel energy recovery device adopts separation design, and use the high pressure turbine rotating fluid, having the liquid pressure converted into mechanical energy. High pressure pump was driven by gas turbine and motor, which increased the fluid pressure. Compared with the same

size of reverse osmosis desalination system, using this device can reduce the output power of high pressure pump motor, and reduces the equipment investment and running cost greatly.

Rotary pressure exchanger(PX model)

Rotary pressure exchanger was launched in the late 1990s,which used the principle of positive displacement. The stress can be passed between high pressure fluid and low pressure fluid contact directly in the rotor axial flow passage. PX type rotary pressure exchanger, made by ERI companies of the United States, internal structure as shown in figure 5[4].

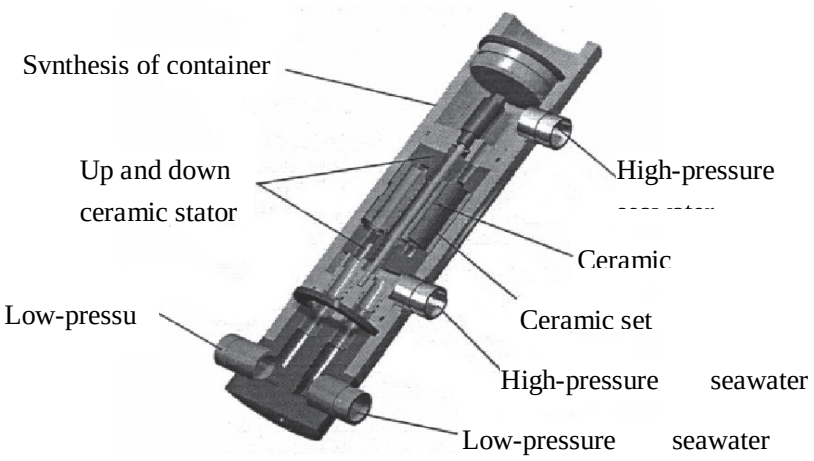

Figure 5 The internal structure of the PX pressure exchanger

The non-shaft rotor periphery of rotary pressure exchanger has multiple longitudinal channel, where pressure was passed from high pressure fluid and low pressure fluid.Its working principle is shown in figure 6. Under the impetus of the high pressure fluid, the rotor rotate relative to wagon-flow allocation plate both of whose ends was static.That make the channel was switch between the high and low pressure area.When the channel got into the low pressure area, pressure of high pressure fluid whose energy has been transferred was reduced,and was discharged by the low pressure fluid entering the channel.When the channel turned to the sealing area, high pressure fluid got into the channel, that made the original obtain high pressure, and be discharged from exit.Then the system got into a new cycle, the rotation of the rotor kept the pressure exchange process continues. The time of the low pressure fluid and high pressure fluid stay in the hole is very short, and it also separated by a closed fluid column, so the two almost never mixture. Stress can be passed directly between the high pressure fluid and low pressure fluid, and the energy recovery efficiency is higher[10]. The system flow signal as shown in figure 7.

The DWEER,short for the Daplex WorkExchange Energy Reeoucry,whose working principle is as shown in figure 8[11]. Its way of energy recovery is the same as PX, also transform s the directly about the displacement of pressure. Using the high pressure fluid drived the piston in pressure vessel, and powered on low pressure fluid to make its pressure.Then the piston separated high pressure fluid and low pressure fluid effectively, avoid the two hybrid. The two containers proceed low pressure fluid inputting and pressure transferring alternatly.The cut of valve was controled by valve switch on time. Piston’s resistance is small, and the energy conversion efficiency can up to 91% ~ 96%.

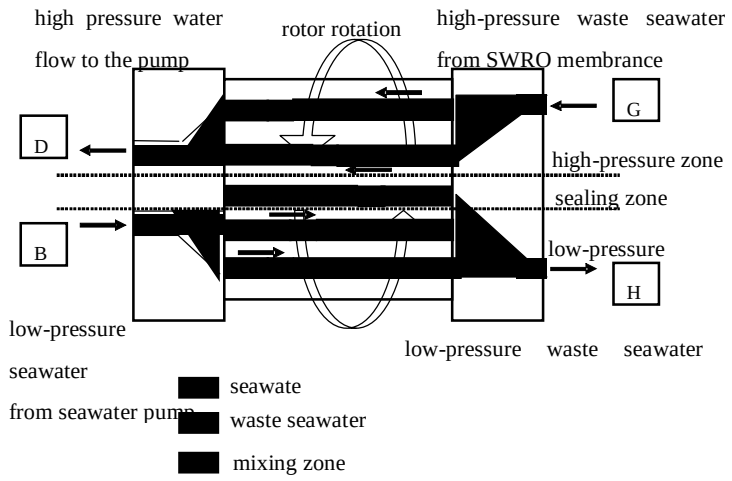

Figure 6 Working principle of the PX pressure exchanger

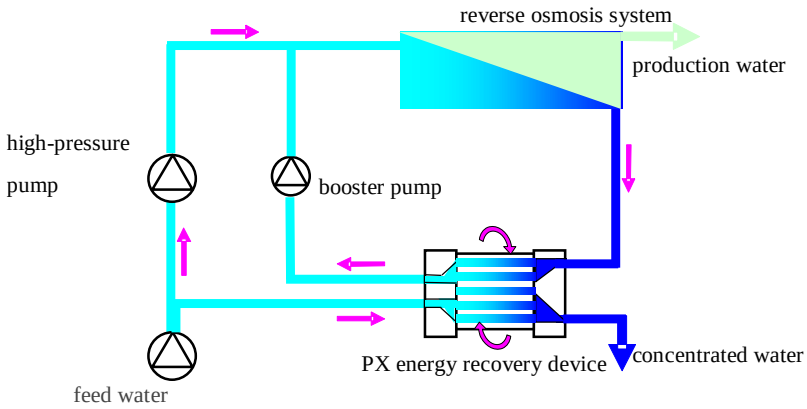

Figure 7 The flow chart of energy recovery device in PX pressure exchanger

Daplex WorkExchange Energy Reeoucry

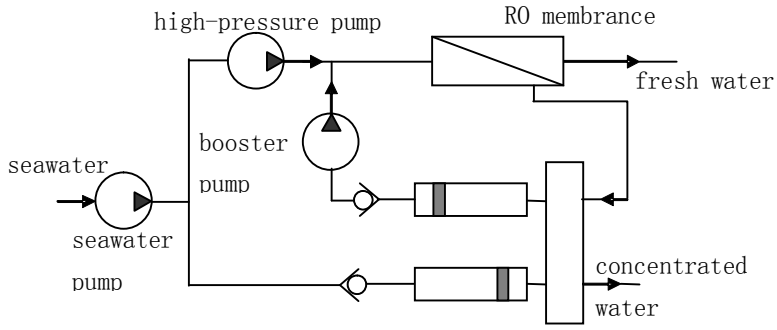

Figure 8 The schematic diagram of energy recovery device in DWEER

Research has shown that positive displacement energy recovery device, especially the rotary pressure exchanging equipment had higher energy recovery efficiency, which has become a hot spot of research and development in home and abroad.

Conclusion

From the developing trend of the application of energy recovery device, hydraulic turbine has been applicated more widely.But in recent years, power switching energy recycling equipment, especially PX ,in the builtted desalination engineering has been widely used. Power switched

energy recovery device with high energy recovery efficiency, has become a hot spot of research and development in the desalination industry gradually.Its product market share has a trend of rapid growth develop year by year.In recent years, most of domestic seawater desalination project has adopted PX energy recovery device,which is made in ERI company in U.S.

References

[1] Liu Yong-mao,Su Hua.Curent Sistuation and Future ofWater[J].Water resources protection,2001(4)12-20.

[2] Fritzmann C，Lowenberg J，Wintgens T，Melin T.State-of-the-art of reverse osmosis desalination[J].Desalination，2007，216:1-76.

[3] Yuan Guo-ling，Feng Hou-jun. Technical Progress in Seawater Desalination Technology at Home and Abroad [J]. CHINA WATER & WASTEWATER 2008.24(20):86—90.

[4] Jiang Hai-feng，Zhou Yi-hui．Numerical Simulation of Rotary Fluid Pressure Energy Exchanger：(D)．DAlian：Dalian university of technology

，2008．6．

[5] John P.MacHarg. The Evolution of SWRO Energy-Recovery Systems. USA: Energy Recovery Inc.2003.

[6] XU Xuan-kuo,Wang Shi-chang. Progress in research of device of pressure-energy recovery from residual hydraulic in reverse osmosis desalination system [J]. Technology of water treatment,2002，28（2）:63-66.

[7] Li Zhao-ming，Han hong. Energy Recovery For Reverse Osmosis Desalination. Xinjiang chemical，2009.4:3-6.

[8] Andrews W T,Laker D S.A twelve year history of large scale application of work exchange recovery technology[J].Desalination,2001,138(1-3):201-206.

[9] Tan Bin. Reverse osmosis desalination system energy saving technology.2007 Desalination and water reuse BBS on west lake.87-97

[10] PX_220_manual[M].Energy Recovery Inc.2004

[11] Amjad Z. Reverse osmosis membrane technology [M]. The water chemical and industrial applications.Bei jing. Chemical industry press.1999