Research and Application for Key Technologies of Container Automated Guided Vehicle (AGV) at Port

Yang Rui [a *], Zhang Wei [b]

China Waterborne Transportation Institute, Beijing, 100088, China

[a]yangr@wti.ac.cn, [b]68861452@qq.com

Keywords: Automated Guided Vehicle (AGV), Port, GPS, Inertial Navigation, Laser Positioning.

Abstract. On the basis of the research for AGV20 container automated guided vehicle (AGV), this paper focuses on analyzing and discussing core technical issues and treatment mode for global positioning system at the aspect of design and application, especially dual close-loop vector control drive of positioning and navigation system and key technology of positioning communication for AGV20 container AGV.

Introduction

With the expansion of foreign trade in China in the recent years, the container transportation industry is developed rapidly and moreover, 90% of domestic goods are exported by marine transport; the goods and container throughput at ports in China has ranked the first in the world for more than 10 years continuously and the three indexes for shipbuilding have topped the world for years. With development of container transportation industry, the port construction and lifting transportation equipment technologies are changed greatly, among which the horizontal automated transportation equipment is highly intensive.

Since 1993 when Rotterdam ECT, Netherlands started horizontal automated transportation system of container, Germany, UK, Italy, USA, Japan and Singapore have developed, used and popularized horizontal automated transportation system of container, among which unpiloted container AGV for the horizontal container transportation from front of port to yard plays a vital role in container horizontal automated transportation system.

The scientific research platform for wharf automated operation test should be built and the key technology of logistics equipment and control system for wharf automated and intelligent transportation should be tested and researched to provide new, advanced handling technology test data for port construction and design basis for engineering design. The container horizontal automated transportation experiment system consisting of AGV20 container horizontal AGV, positioning and navigation system, wireless communication system and operation route control is developed in order to improve application and development for horizontal automated transportation system at port.

System Design of AGV20

The container horizontal automated transportation experiment system should be developed based on general requirement for automation, intelligence and application.

For structure of container horizontal automated transportation experiment system, see Fig. 1.

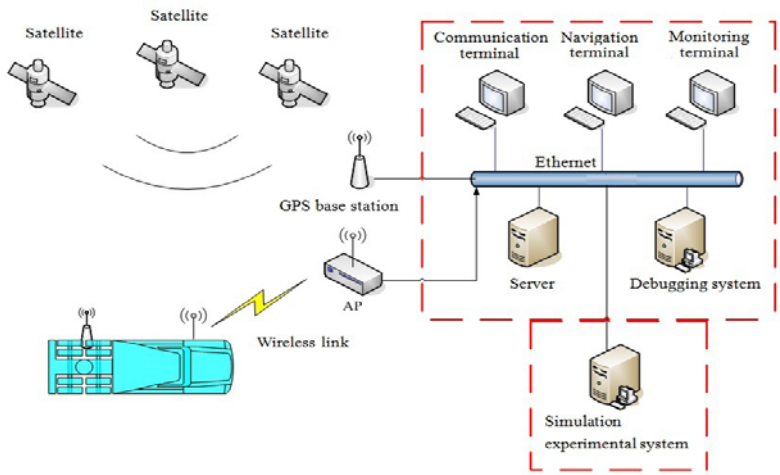

Fig. 1 Structure Chart of Container Horizontal Automated Transportation Experiment System

Structure and feature of AGV

In terms of general design of AGV20 container AGV, the appearance parameter of the whole vehicle is optimized to keep load distributed rationally under the premise of meeting loading 20Ft ISO standard container. The integral appearance design should be elegant and concise with simple and smooth line. AGV mainly consists of self-decision making system, power and transmission system, steering system, suspension system, braking system and frame structure, as shown in Fig. 2.

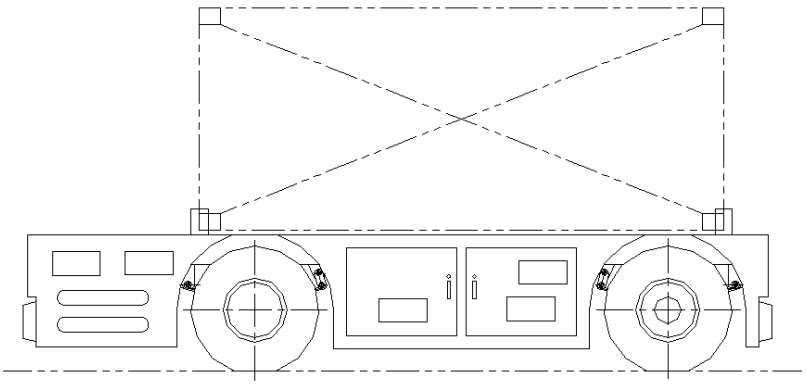

Fig. 2 AGV20 Container Horizontal AGV

According to electric power driving plan, AGV20 container horizontal AGV is powered by diesel generating set and operated by drive axle driven by frequency conversion motor. The front and back axle are steering and driving axle; the front and back four-wheel steering function can make radius of turning circle smaller and steering more flexibly; the front and back axle can make control more conveniently by operating respectively. As driven by hydraulic pressure with caliper disc brake type and provided with full four-wheel braking mode, the braking system is featured by good braking effect and safe and reliable operation.

AGV20 container horizontal AGV can form a whole set of man-machine harmony complicated system integrated with machinery, electricity, hydraulic pressure, photo-electricity, computer, information and communication, the main technical performance parameters of which have been shown in Table 1.

Table 1 Technical Parameter of AGV20 Container Horizontal AGV

Items	*Parameters*	*Items*	*Parameters*
Rate load	[2,400 kg]	Wheel base	4.8 [m]
Full-load operating speed	[20 km/h]	Track	1.991 [m]
No-load operating speed	[10 km/h]	Drive axle ratio	19.61
Minimum radius of turning circle [8.8 m]		Unit	~100 [kW]
Boundary dimension	Length: 8.71 [m]; width: 2.9 [m] ; height: 1.88 [m]		

As the vehicle control center of positioning and navigation system, the self-decision making system of AGV20 container horizontal AGV is used for collecting signals, analyzing data, judging information and supporting decision for AGV30 AGV, receiving vehicle management and navigation information, calculating specific working contents for vehicle, distributing instruction and analyzing working condition. It is provided with sensor signal acquisition module, logistic analysis and judgment module, information and data decision supporting module and dual close-loop vector control module which is particularly used for electric driving and motion control for vehicles.

Positioning and navigation system

AGV20 positioning and navigation system

AGV20 container horizontal AGV positioning system mainly consists of GPS positioning system, inertial navigation system and precise laser positioning device.

GPS positioning system can provide real-time high-precision position data required by automatic navigation for vehicles so that the GPS antenna at base station can be set at one known point in position coordinates when the system is operated in order to receive GPS signal of local point. According to accurate known coordinate value, GPS receiver at base station can deal with error correction information and send it to user station in time division mode by means of data transmission link broadcast so that all user stations can calculate time division and positioning data based on base station data received and output the positioning signal calculated to AGV20 self-decision making system.

The inertial navigation devices should be used for compensating vehicle position calculation and auxiliary navigation when GPS system is sheltered based on azimuth angle. The combination positioning method between GPS and inertial navigation device can meet requirements for real-time positioning efficiently.

The precise laser positioning system can provide precise position and check at key point of route. The container can guide vehicle to key point of route; for example the signal of GPS positioning and navigation system is affected near crane at container yard, for it can be sheltered by crane and container at yard. If the parking position of container automated guided vehicle is positioned accurately but the precision measured by GPS positioning system and inertial navigation device cannot meet requirement, the precise laser positioning device should position container automated guided vehicle to make navigation accurately during motion.

The vehicle navigation terminal should be analyzed and handled according to current position and path information of vehicle by sending driving control instruction to vehicle control terminal which can control vehicle to drive according to instruction.

AGV20 positioning and navigation anti-collision system

It is a MUST to ensure safety of AGV at all occasions within validity. AGV20 anti-collision protection system consists of ultrasonic non-contact anti-collision system and stroke contact anti-collision system: The ultrasonic non-contact anti-collision system is composed of wireless ultrasonic barrier approach detection device and the stroke contact sensor in stroke contact anti-collision system can send signal after the vehicle touches any barrier for emergent parking.

Ultrasonic non-contact anti-collision system

For the sake of safety, the barrier approach detection device is set in multi-level approach condition and the barrier approach detection device can be set for Grade 2 or higher safety protection. The object measured can be detected without touching it and the vehicle can judge distance from the object measured based on signal strength to make AGV drive by reducing speed within certain scope and stop AGV in shorter distance. After the barrier is cleaned, AGC can recover normal driving condition automatically.

As the safety device operating earlier than stroke contact anti-collision system, the ultrasonic non-contact anti-collision system can control AGV operating speed in rational scope, reduce inertia and park the vehicle slowly.

Stroke contact anti-collision system

To avoid the negative influence caused by collision and ensure personal, article safety in operating environment, the compulsory parking safety devices shall be set in AGV vehicle, such as stroke contact anti-collision device and barrier contact buffer. Generally the stock contact anti-collision device is installed on surface of barrier contact buffer, for the surface of vehicle can be deformed once it is touched and the vehicle can be stopped emergently after the stroke contact anti-collision device distributes signals; the elastic and flexible barrier contact buffer is set at front and back of AGV operating direction so that it can absorb vehicle collision energy efficiently after collision accident instead of endangering any person or article collided; after the fault is handled, the buffer can cover functions automatically.

Wireless communication system

IEEE 802.11 wireless local area network (LAN) technology is used in wireless communication system, which is built by 802.11 communication standard products by comparison analysis, including central processing system, base station of positioning system, switch, antenna, mobile station of positioning system and system software. The wireless data transmission link built by wireless transmission system can transfer information between base station of positioning system and mobile station of positioning system mutually.

The necessary control information transmission via wireless communication mode between central control room and vehicle ensures the normal and efficient system operation. Besides, the wireless network can cover all paths for the whole vehicle so as to ensure that the vehicle can move stably and reliably.

Operating route control

The operating route means analyzing and extracting the driving line of intelligent vehicle mainly by GIS. The turning and parking position is determined according to turning, acceleration and deceleration, parking characteristic experimental data provided by vehicle control system, which is controlled to enter turning and parking control procedure according to positioning and navigation position information.

The monitoring and simulation test systems are mainly used for realizing the auxiliary functions relevant to automatic navigation. The operating route control and monitoring system set in monitoring center is used to control and display horizontal automatic transportation system of container, and finish the dispatch of horizontal automatic transportation system and status monitoring. The monitoring center can arrange starting and ending point of vehicles and determine running route according to the operation requirements. The running route can be transmitted to vehicle navigation terminal through wireless network and sent to vehicle control terminal after processed by navigation terminal which should control vehicle running, turning and driving mechanism operate based on the route specified. Besides, the monitoring center can adjust running path based on practical condition of road so that the vehicle can drive at new path after receiving adjustment order and making confirmation.

Operating route control system: based on such techniques as vehicle navigation, positioning and wireless communication, the operating control system is the container horizontal automated operating central control system built by considering the specific requirements for operation. The operation route control system can determine starting and ending point of vehicle and running path by simulating operation tasks and send path information to vehicle simulation navigation terminal via wireless network.

Monitor system: The open protocol OPC (OLE for Process Control) based I/O driver configuration software is used for system to collect real-time operating status of control system and such status is displayed in monitor terminal in monitoring center in the form of human-computer interface. The real-time operation status is on display panel in central control room in real time for the purpose of monitoring the whole operation process.

Conclusion

With the quick development of economy, the container transportation industry is developed rapidly and the construction for container horizontal automatic transportation experiment system becomes more urgent and important than ever. AGV can ensure the system can drive along route scheduled automatically without manual navigation to deliver the goods or materials to destination from starting point; featured by flexibility, the running path can be changed flexibly based on requirement for storage goods allocation and technological process for production.

Featured by clear structure, high automation, prominent intelligence and high safety, AGV20 container horizontal automated transportation experiment system has been researched and developed successfully to bring new choices for container logistics and plays a significant role in the logistics automation development.

References

[1] Hans-Otto, Günther Martin Grunow, Matthias Lehmann. AGV Dispatching Strategies at Automated Seaport Container Terminals. International Symposium on OR and Its Applications. 2005

[2] B Bona，L Carlone，M Indri，Supervision and monitoring of logistic spaces by a cooperative robot team: methodologies, problems, and solutions. Intelligent Service Robotics. 2014

[3] C Chen，B Xia，BH Zhou，A reinforcement learning based approach for a multiple-load carrier scheduling problem. Journal of Intelligent Manufacturing. 2015

[4] A Salehipour，H Kazemipoor，LM Naeini, Locating workstations in tandem automated guided vehicle systems. International Journal of Advanced Manufacturing Technology. 2011

[5] W Yu，PJ Egbelu, Design of a variable path tandem layout for automated guided vehicle systems. Journal of Manufacturing Systems. 2001

