# Finite Element Analysis of Electromagnetic Release in Dynamic Status

Yuqin Yao[1,a], Yuxin Mo[1], Qiushi Liu[1]

[1] Chengdu University of Information Technology, Chengdu, 610225, China

[a] email: yyq@cuit.edu.cn

**Keywords:** Ansoft; finite element; electromagnetic release

**Abstract.** In this paper, based on finite element method, Ansoft was adopted to study the static and dynamic characteristics of electromagnetic release. Firstly, electromagnetic release was split and made models. According to the actual material properties, the corresponding parameters were set. And after creating the mesh, calculation was processed. The results show how the electromagnetic force changes with the current and the performance of electromagnetic release in different short circuit current.

## Overview

Electromagnetic release of miniature circuit breaker is the core component of over current protection. It must meet the requirements of the tripping characteristic curve when the current is less than the specified value must not trip when the current value exceeds several times the rated current is required in accordance with the inverse-time tripping characteristic curve[1]. Due to the shorter trip time, the faster the circuit breaker cut short circuit. Therefore, the performance of electromagnetic release a greater impact on limiting miniature circuit breakers and breaking properties, Electromagnetic release of dynamic and static characteristics are very necessary[2]. This paper used Ansoft to calculate the electromagnetic force solenoid type electromagnetic release, and static and dynamic properties of electromagnetic release were analyzed.

## Static Characteristics of Electromagnetic Release Simulation

Static characteristics of the electromagnetic solenoid system is the stability of the system in such a position that does not change the status of their work or just for slow changes, the relationship between the variables at different time points would not be considered (time feature will not be included in this system), the electromagnetic force and the relationship between the air gap [3]. Static characteristics of electromagnetic release refers to the relationship between the slower moving core infinite velocity to a position (fixed-size gap value) when the electromagnetic suction and air gap.

① Three-dimensional Modeling of Electromagnetic Release

The electromagnetic release MCB split to obtain the following main components: coils, static core, moving core, rail, line pipe. The electromagnetic release was split into following components: coils, static core, moving core, rail, line pipe [4]. Each of them was measured and created a 3D model in Maxwell. It is shown as figure 1.

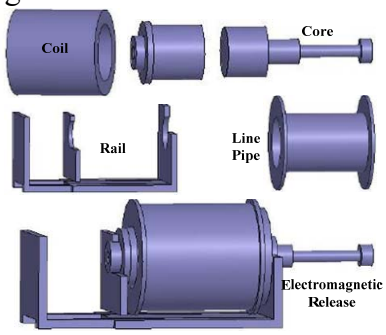


Fig.1 Various parts and assembly models of electromagnetic release

 

②Material Properties

Material properties of the components of the electromagnetic release were obtained by searching, as shown in table 1.

Tab.1 each component material properties of model

| Component | Material Type | Num | Relative magnetic permeability | Body Conductivity (s/m) |
|---|---|---|---|---|
| **Coil** | copper | Copper | 0.999991 | 58000000 |
| **Dynamic core** | Nonlinear ferromagnetic | Steel_1008 | BH curve | 2000000 |
| **Static core** | Nonlinear ferromagnetic | Steel_1008 | BH curve | 2000000 |
| **Rail** | Nonlinear ferromagnetic | Steel_1008 | BH curve | 2000000 |
| **Line pipe** | Bakelite | Custom | 1 | 0 |
| **Core sleeve** | Bakelite | Custom | 1 | 0 |

② Establish boundary conditions, mesh, setting incentives and options for solving

After the model is built and set the material properties, mesh can be carried out, because the electromagnetic release model is relatively complex, not the software comes with an adaptive triangulation method, instead of using the manual split [5]. Selected individual components, its finite element mesh, in order to improve the efficiency of solving can solve part of the mesh will be mainly small for some, but for a minor portion of the mesh can be larger. In this paper, the core, coil and rail three-part grid largest element edge length are set to 1mm, other parts of the maximum element edge length is 5mm, mesh grid shown in Figure 2.

Before setting the boundary conditions must first draw a cube area, surrounded by the entire model in which, as solving the region, and set the material properties of the vacuum in the region, and then specify the boundary conditions for the balloon boundary conditions. In Ansoft three-dimensional modeling, in general, to draw into a cylindrical coil, the paper also uses this method to draw the coil. To energized, the coil must be drawn on a longitudinal cross-section in a section to add a direct current excitation source, the added excitation source shown in Figure 3.

Setting options for solving solving static and dynamic electromagnetic force between the cores, the solution is set to 3% error, the adaptive number of solutions is initially set at step 15, according to the solution results, if not converged, the error can be solved to increase the corresponding and solving steps.

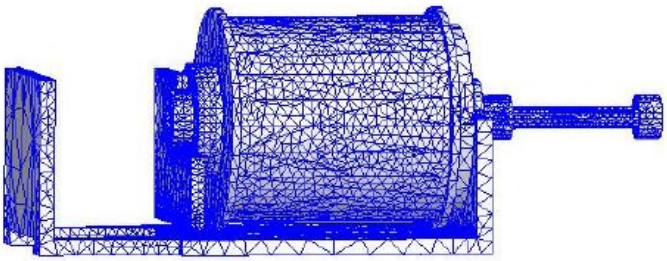

Fig.2 Meshing Figure

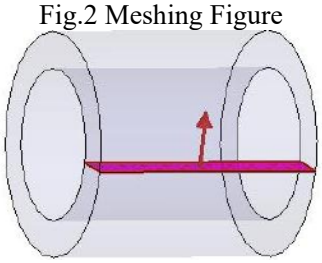

Fig.3 coil current

④The results of the electromagnetic force of electromagnetic release

After various conditions being set up, simulation could be processed. In this paper, the simulation calculates the gap is 3.19mm, 3.00mm, 2.50mm, 1.50mm, 0.50mm cases under different short-circuit current, respectively, static and dynamic electromagnetic force between the core size. Due to the number of turns is 112 turns, so when you add the excitation source, should the current amplification 112 times. Expression of the results to a more intuitive, the solenoid connected to a power line with current change diagram shown in Figure 4.

It can be seen from Figure 4: When the gap is constant, as the current increases, the electromagnetic suction also increases. Mainly due to a straight wire, the current in the wire, the stronger the magnetic field generated by the electromagnetic release 112 turns of the coil can be seen as consisting of several sections of straight wire, the magnetic field generated by the superposition of them, each conductor has a current pass, the current increases, the magnetic induction will be increased, so that the electromagnetic force is increased.

It also can be seen that, when the current increases, as the gap increases, the magnetic attraction is reduced, which coincides with the theoretical calculations of electromagnetic attraction query formula. This is mainly due to the electromagnetic attractive force and the electric current I, the number of turns N, the cross-sectional area S of the air gap and the air gap length L and so on, when the current is constant, the level of the movable core moves, the first three factors are not fixed variable, so as to increase the air gap, i.e. L increases, the electromagnetic force is reduced. Can be analyzed according to the internal magnetic flux, when the air gap increases, and the leakage flux will increase the effective magnetic flux decreases, the reluctance increases, the electromagnetic force is also reduced, but not strictly decreasing law, it is because the process of change in the air gap, it is possible to reach magnetic saturation.

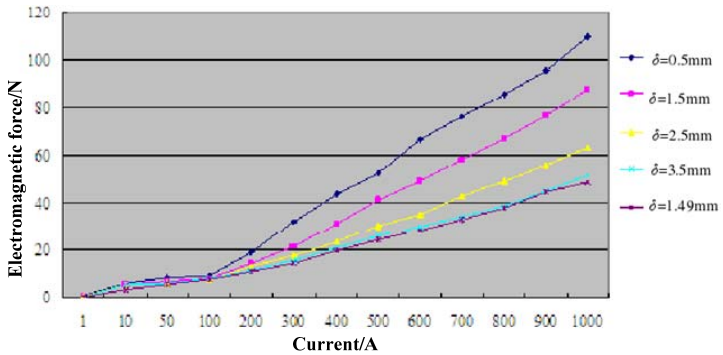


Fig.4 Electromagnetic force curve

**Dynamic simulation of electromagnetic release characteristics**

①dynamic core mechanical properties set

When use Ansoft software release for dynamic electromagnetic simulation analysis, the model can still be used static model, but in the process of solving the model need to add movement to the border region, adding that the movement (band) region, this area is a real sport positive multilateral body or wedge boundaries, can not be a cylinder, and the entire band area must be kept enclosed sports area.

Transient different static magnetic field and the settings in that it requires to set the mechanical properties of moving parts, through the implementation of Maxwell 3D-Maxwell-Model-Motion Setup-Assign Band, Sports Properties dialog box appears set, including setting motion parts (moving core) sports type, quality direction of movement, range of motion, initial velocity and moving parts. Herein is the horizontal movement of the movable core disposed into the linear motion type, the direction of movement along the y-axis negative direction, the initial velocity set to 0, the motion range 0 ~ 3.19mm, mass of the movable core 1.4828g.

②Short circuit current

Before the simulation, assume before the advent of the short circuit current, no current in the coil, the initial electromagnetic force is zero. The topic for the closing simulation phase angle is 0 °. The power factor angle is 60 °. The dynamic characteristics of electromagnetic release. Figure 5 is an electromagnetic force characteristics of the type of short-circuit current.

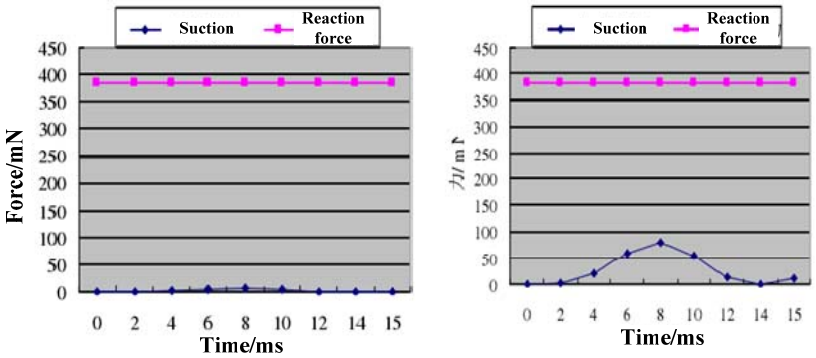


a) Periodic component of the maximum short-circuit current is 1A

b) Periodic component of the maximum short-circuit current is 3.5A

Fig.5 Dynamic Simulation in different current

Figure 5 shows that when the periodic component of the maximum short circuit current 3.5A or less at the time of the spring reaction force is always greater than the electromagnetic attraction, electromagnetic release does not work.

## Conclusions

Electromagnetic release is execution unit of breaker and is very important. In this paper, the finite element simulation software Ansoft was adopted to study its static and dynamic characteristics. Be carried out in the first simulation software to establish a three-dimensional model, and then set the material properties of the actual situation, and then meshing after getting results. The results show the electromagnetic force with the static relationship between the current and the dynamics of the release operation in case of different currents.

## References

[1] B. Rich Operation Wind Power Capability Worldwind. Wind Power Monthly . 1998

[2] Z.Saad,Saoud N.Jenkins.The Simple Dynamic Model Of Wind Farm. IEE Proceedings C Generation Transmission and Distribution . 2003

[3] Xiang Dawei,Li Ran.Control of a Doubly-fed InductionGenerator in a Wind Turbine During Grid Fault Ride-through. IEEE Trans.on Energy Conversion . 2006

[4] Seman S,Niiranen J.Performance study of doubly fed wind-power induction generator under network disturbances. Energy Conversion . 2006

[5] Andreas Petersson."Analysis Modeling and Control of Doubly-Fed Induction Generator for Wind Turbines[D].". . 2005