Design of Power Line Carrier Communication System Based on Orthogonal Frequency Division Multiplexing

Weitao Zhang

School of North China Electric Power University, Baoding 071000, China;

Keywords: Power Line Carrier Communication, OFDM, Embedded system.

Abstract. In recent years, power line carrier communication (PLC) have been a focus once again, which is mainly achieved by orthogonal frequency division multiplexing (OFDM) Currently. OFDM is a multi-carrier modulation technique with densely spaced sub-carriers, that has gained a lot of popularity among the broadband community in the last few years. This paper details this technique, and designs the PLC system employing OFDM, which is based on embedded system. The system features high performance and the high degree of common use.

Introduction

Older multi-channel systems using FDM, Even though the prevention of spectral overlapping of sub-carriers reduces (or eliminates) interchannel interference, leads to an inefficient use of spectrum. The guard bands on either side of each sub-channel is a waste of precious bandwidth. To overcome the problem of bandwidth wastage, N overlapping (but orthogonal) subcarriers was used, each carrying a baud rate of 1/T and spaced 1/T apart. Because of the frequency spacing selected, the sub-carriers are all mathematically orthogonal to each other, as shown in Figure 1. This permits the proper demodulation of the symbol streams without the requirement of nonoverlapping spectra. Another way of specifying the sub-carrier orthogonality condition is to require that each sub-carrier have exactly integer number of cycles in the interval T. Alternatively, one may use a DFT operation followed by low-pass filtering to generate the OFDM signal.

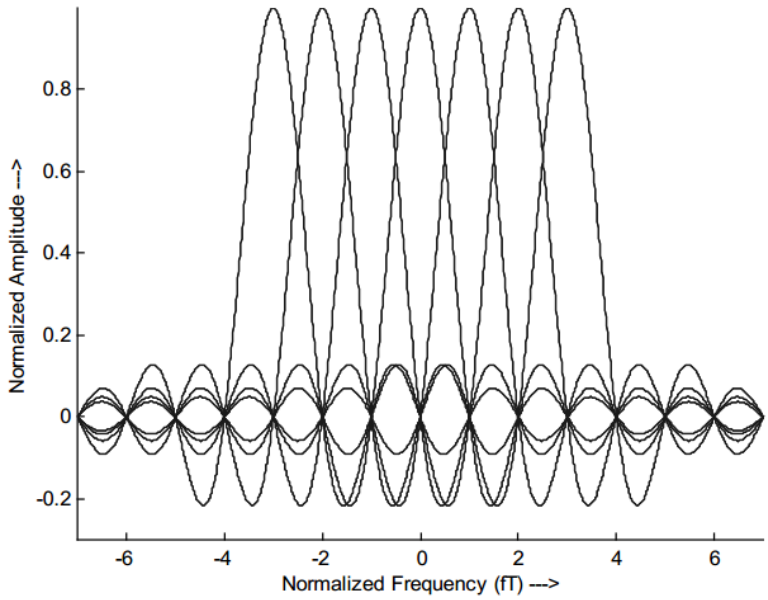

Fig 1: Spectra of Individual Sub-Carriers

OFDM Principle

The use of discrete fourier transform (DFT) in the parallel transmission of data using frequency division multiplexing was investigated in 1971 by Weinstein and Ebert. Consider a data sequence $d_0, d_2, \cdots, d_{N-1}$, where each d_n is a complex symbol. Supposedly, performing an IDFT on the

sequence $2d_n$ (the factor 2 is used purely for scaling purposes), will produce a result of N complex numbers S_m $(m = 0,1,\cdots,N-1)$ as:

$$S_m = 2\sum_{n=0}^{N-1} d_n \exp(j2\pi \frac{nm}{N}) = 2\sum_{n=0}^{N-1} d_n \exp(j2\pi f_n t_m)$$
$$m = 0,1,\cdots,N-1 \tag{1}$$

Where,

$$\begin{cases} f_n = \dfrac{n}{NT_s} \\ t = mT_s \end{cases} \tag{2}$$

Where, T_s represents the symbol interval of the original symbols. Passing the real part of the symbol sequence represented by equation (1) thorough a low-pass filter with each symbol separated by a duration of T_s seconds, yields the signal,

$$y(t) = 2\,\mathrm{Re}\left[\sum_{n=0}^{N-1} d_n \exp(j2\pi \frac{n}{T} t)\right]$$
$$0 \le t \le T \tag{3}$$

Where, T is defined as NT_s. The signal $y(t)$ represents the baseband version of the OFDM signal.

It is easy to note from (3), that (a) The length of the OFDM signal is T. (b) The spacing between the carriers is equal to 1/T. (c) The OFDM symbol-rate is N times the original baud rate. (d) There are N orthogonal sub-carriers in the system. The signal defined in equation (3) is the basic OFDM symbol.

PLC System Design

Host MCU The PLC system uses SM2400 produced by semitech as host MCU. The SM2400 is the ultimate narrowband power line communication (N-PLC) modem that combines cost effective design optimized for PLC applications with high level of programmability to address multitude of communications schemes and evolving standards. The SM2400 features a dual core architecture to guarantee superior communication performance while maintaining very high levels of flexibility and programmability for OFDM based and other standards as well as proprietary communications schemes. It contains all the necessary mixed signal components, such as A/D, D/A, Opamp, PGA to yield a cost effective PLC system design for any N- PLC application. The SM2400 has sufficient resources to execute basic networking applications, so it can be used as a stand-alone MCU or in conjunction with a host MCU.

PLC system The PLC module contains the SM2400 chip, a SPI flash memory, analog front-end (AFE) circuit, coupling circuit, JTAG interface and headers to access all the IO pins. It combines a PHY and MAC with mixed signal components for optimal system cost and performance. Fig 2 and Fig 3 show the MCU and transceiver in system.

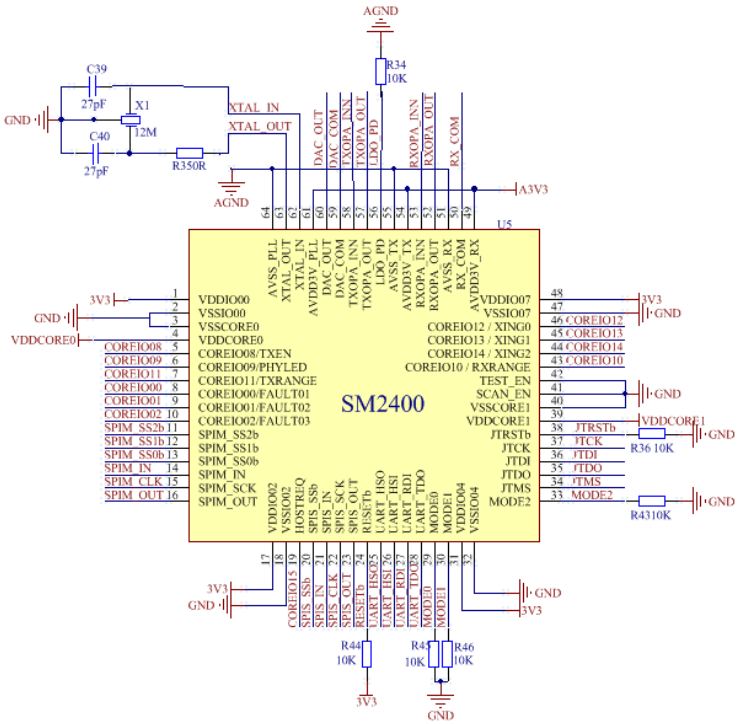

Fig 2: Schematic part Ⅰ

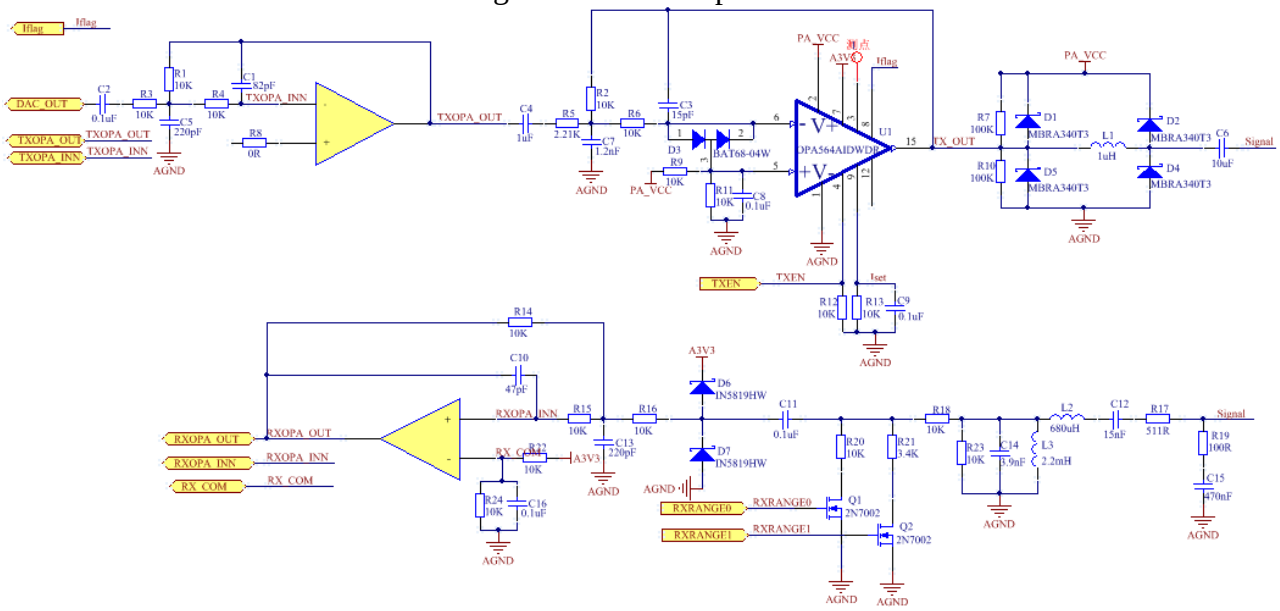

Fig 3: Schematic part Ⅱ

System has the following features:

- Standardized PLC module;
- UART interface with handshaking for flow control;
- Built-in power-line coupling circuit;
- Multiple firmware builds to support all major OFDM standards;
  PRIME, G3-PLC, IEEE 1901.2, XR, XXR, (different standards supported via different firmware loads);
- 9-500KHz band operation (CENELEC,FCC, ARIB);
- 32bit enhanced MAC/Application core up to 90MHz;
- Low power operation modes.

The OFDM PLC module is ideally suited for operation development of software applications with power-line networking for the SM2400 PLC modem including meter reading, smart grid, streetlight control , industrial control, micro inverter.

Summary

Both OFDM transmission and PLC are fast progressing and vibrant research fields currently. Especially, the medium-voltage power line carrier communication system has now mature and is effectively applied in distribution automation system, such as load monitoring system, remote reading meter system, measuring and computing exes and public distribution area and the ring net control system of 10kV etc. Research into fully designed system, is of positive significance for many related fields.

References

[1] Weinstein.S. B, Ebert P. M, “Data Transmission by Frequency Division Multiplexing using the Discrete Fourier Transform”, *IEEE Transactions on Communications*, VolCOM-19, pp. 628-634, Oct 1971.

[2] Ahmad R. S .Bahai, Burton R. Saltzberg, “Multi-Carrier Digital Communications – Theory and Applications of OFDM”, *Kluwer Academic/Plenum Publishers.*

[3] Long Zizhang, Li Shengpei, “Research on new style general high powered power line carrier modem”, 2001’Th China intelligence automation science conf. thesis, Kunming, China, 2001.

[4] Chen Xiang, Wu Runze and Cao Min, "Research of OFDM power line carrier communication based on AMI," Wireless Mobile and Computing (CCWMC 2011), IET International Communication Conference on, Shanghai, 2011, pp. 278-281.

[5] H. Xiao and X. Wu, "Design of Medium Voltage Power Line Spread Spectrum Carrier Communication System Based on Embedded System," Wireless Communications, Networking and Mobile Computing, 2009. WiCom '09. 5th International Conference on, Beijing, 2009, pp. 1-4.

[6] A. Mishra, H. Tayal, M. A. Khan and M. Raza, "Suitable PHY layer of narrow-band power line carrier communication in emerging advanced metering infrastructure scenario," *Standards for Communications and Networking (CSCN), 2015 IEEE Conference on*, Tokyo, 2015, pp. 235-239.

[7] Y. Zhou and Y. Wang, "Research on Modulation Technology of Low-Voltage Power Line Carrier Communication," *Intelligent Systems (GCIS), 2013 Fourth Global Congress on*, Hong Kong, 2013, pp. 296-298.

[8] Q. Zhou, C. X. Zhang, Y. Yang, H. B. Zhou and Z. B. Wang, "Application research of COFDM modulation technology on the power line carrier communication," *Advances in Power System Control, Operation and Management, 2003. ASDCOM 2003. Sixth International Conference on (Conf. Publ. No. 497)*, 2003, pp. 647-652.

[9] M. Ahmed and W. L. Soo, "Power line carrier (PLC) based communication system for distribution automation system," *Power and Energy Conference, 2008. PECon 2008. IEEE 2nd International*, Johor Bahru, 2008, pp. 1638-1643.