Smart Home Smoke Detection and Relay Contract based on STM32

Hao Yin

Department of Electrical Engineering, North China Electric Power University (Baoding), Baoding 071000, China;

Email:jsyz165@gmail.com

Keywords: Smart home, Relay control, STM32, IoT.

Abstract. This paper discuss the smoke sensor and the relay control in the smart home.STM32 is used as the central part of the whole system and LwIP protocol is also applied to transfer data. The system uses the MQ-2 smoke sensor detect the concentration of combustible gases in air, and uses the SRD-05VDC-SL-C to close and cut off the circuit. The paper also discuss the sensitivity characteristics and the temperature and humidity effect of the smoke sensor. At the end of the paper, it is given the C code in the KEIL MDK environment.

Introduction

Nowadays, people's daily life at home had been inseparable from the use of electricity. Improper electricity use and the space limitations of operating applications become a much more serious problem. So people need a system with smart home appliances to get aware of the operating status of electricity at anywhere and anytime, which can improving the convenience of people's daily lives and safety.

Since 1984 U.S. and international standards organizations have been writing communications standards for home networks. By the early to mid-1990s standards started to emerge. At the same time the Internet became popular, and some companies decided to create new private specifications for home networks based on TCP/IP [1].The system in this article uses the protocol based on TCP/IP.

Hardware department

The main hardware of the design are the following items, and there are short instructions.

STM32F103

The STM32F103xx medium-density performance line family incorporates the high-performance ARM® Cortex®-M3 32-bit RISC core operating at a 72 MHz frequency, high-speed embedded memories

The devices operate from a 2.0 to 3.6 V power supply. They are available in both the –40 to +85 °C temperature range and the –40 to +105 °C extended temperature range. A comprehensive set of power-saving mode allows the design of low-power applications.

These features make the STM32F103xx medium-density performance line microcontroller family suitable for a wide range of applications. [2]

MQ-2 smoke sensor

This system uses the MQ-2 smoke sensor produced by Zhengzhou Winsen Electronic Technology CO., LTD. It is a Silica-based metal-semiconductor sensor, the mechanism is that the tested gas will result in the conductivity change.MQ-2 conductivity is inversely proportional to the detected gas. The lower the concentration of the detected gas, the resistance of MQ-2 will be the larger.

The maximum operating temperature MQ-2 sensor is generally 300 to 400 °C, detecting concentrations ranging from 300 to 10000ppm, liquefied gases such as its sensitivity is relatively high, it is possible in addition to natural gas and other harmful gases and smoke is detected so that · sensor is to be used in individual households and industrial gas leak monitoring and portable gas detection.

SRD-05VDC-SL-C Relay

As we know that the software may fall to operating due to flaw of programming. The protection system should have the backup plan for this kind of situation. The electrical control circuit is more reliable than software in complex environment. The component we used is 3-pin-5V electrical relay.

The relay has following features: [3]

- Control high-power devices up to 10A with a simple high/low signal
- Provides isolation between the microcontroller and the device being controlled
- Screw terminals for relay connections
- 3-pin servo-style header for power/signal interface
- Voltage requirements: 5V DC (Relay Power), 3.3V to 5V DC (Input Signal)
- Current requirements: ~85 mA (Relay Power)
- Operating temperature: -13 to +158 °F (-25 to +70 °C)

Software Development Environment

Keil MDK includes IDE, C/C++ compiler, debugger, Software Pack management, and CMSIS. These features make it the most comprehensive software development solution for ARM Cortex-M microcontrollers. It.

Smart home hardware system implementation

MQ-2 Circuit Structure

The structure of MQ-2 sensor is shown in the following Figure 1

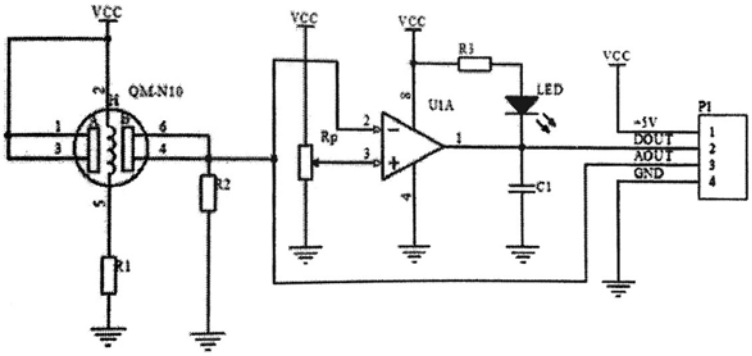

Figure1: MQ-2 circuit structure

MQ-2 Obtainment of monitoring data

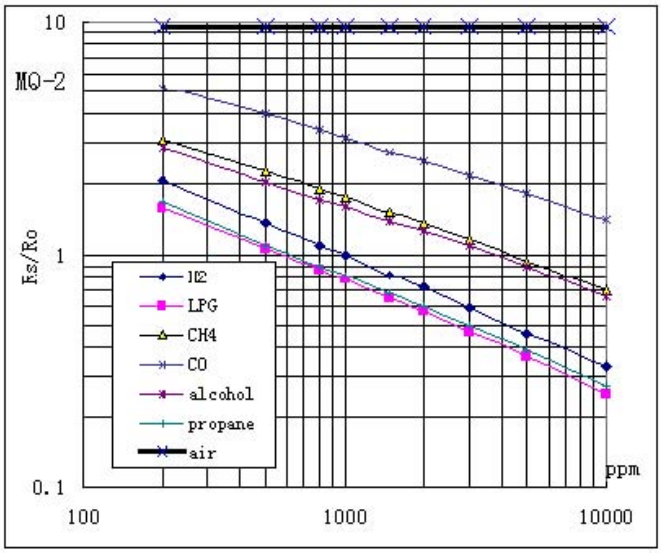

Figure2: Sensitivity characteristics Graph [4]

The ordinate of the sensor resistance ratio (Rs / Ro), the abscissa is the gas concentration. Rs represents the sensor resistance values at different concentrations of gases Ro represents hydrogen sensor in 1000ppm resistance figure all tests are done under standard test conditions.

Sensitive body power (Ps) can be calculated by this formula: $Ps=Vc^2 \times Rs/ (R_S+R_L)^2$. The formula for the resistance of the sensor: $Rs= (V_C/V_{RL}-1) \times R_L$.

The calculation code as follows:

```
char MQ-2_Output(unsigned short int ADC_value)
{
    float AD_V;
    float AD_V2;
    //get the data transformed by ADC1
    AD_V=ADC_value/pow(2,12)*3.3;
    AD_V2=(AD_V-1)*200;
    V=AD_V2;
    Clock1s=0;
    printf("Current somke concentration is ",ADC_value/5);
    return ((char)(ADC_value/5));
}
```

Relay Control

The goal of relay control circuit is to use low power control loop to control the high power load loop. This kind of circuit is called relay amplifier circuit which shown in Figure 3

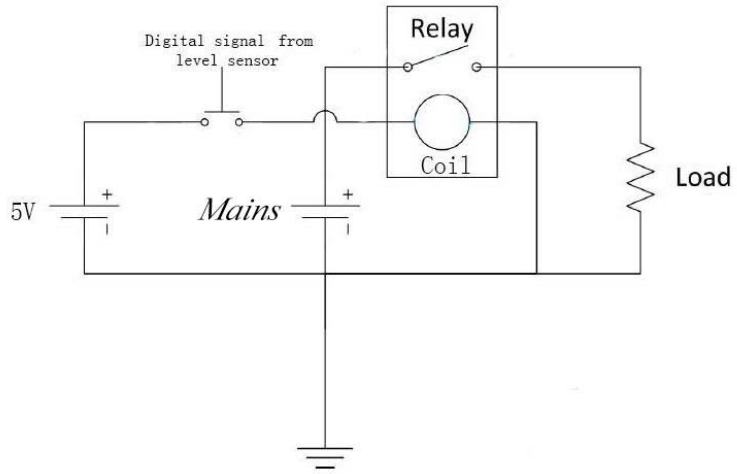

Figure 3: Relay Amplifier Circuit Diagram

Relay Control Implementation

(1) Server connection initialization, Binding and listens, assigning callback function server accept

```
void Yee_Client_Init(void
{   YeeClient.connected=1;
    IP4_ADDR(&YeeClient.ipaddr,202,206,212,153);
    YeeClient.port=80;
    //set up TCP control module
    YeeClient.pcb=tcp_new();
    //binding the local IP address and port number
    tcp_blind(YeeClient.pcb,IP_ADDR_ANY,0);
    tcp_err(YeeClient.pcb,YeeClient.ipaddr,
    YeeClient.port,YeeCli_Connected);}
```

(2) When callback function received new data,designated handle function YeeCli_Connected

```
static err_t YeeCli_Connected(void *arg,struct tcp_pcb *pcb,err_t err)
{   //Server returns the information as a variable transmission
```

```
        tcp_arg(pcb,(void *)TCP_TestData);
        //the handle function called when new data arriving
        tcp_recv(pcb,yee_client_recv);
        YeeClient.connected=1;
        return ERR_OK;}
```

(3) Through the server returns the resulting html analyzed to find the amount on behalf of the state electrical switch, 0 or 1, representing the closing and opening, and then the LED to be high or to low.

```
static void process_recv_html(char *body)
{       char *find=strstr(body,"}");
        printf("%s\n",body);
        if (find==NULL)
        {       printf("ERROR\n");
                yeelink_connect_state=0;
                return;}
                yeelink_connect_state=1;
        find=find-1;
        if (find[0]=='1')
        {       LED1(0);
                LED2(0);
                LED3(0);
                yeelink_relay_state=1;
                printf("ON\n");}
        if (find[0]=='0')
        {       LED1(1);
                LED2(1);
                LED3(1);
                yeelink_relay_state=0;
                printf("OFF\n");}}
```

Conclusion

The system applies the MQ-2 smoke sensor and relay control to achieve the opening and closing of the mains. With the additional module, the fire alarm and any other functions to avoid the loss in potential fire or other serious situations.

References

[1] Wacks K. Home systems standards: achievements and challenges[J]. Communications Magazine, IEEE, 2002, 40(4): 152-159.

[2] STMicroelectronics, 2012, STM32F103x8, STM32F103xB.Available from internet: http://www2.st.com/content/ccc/resource/technical/document/datasheet/33/d4/6f/1d/df/0b/4c/6d/CD00161566.pdf/files/CD00161566.pdf/jcr:content/translations/en.CD00161566.pdf.

[3] S. Relay, "SRD-05VDC-SL-C Relay Datasheet," 2012. [Online]. Available: http :/ / pub .ucpros. com/ download / 27115-Songle-Relay-Datasheet.pdf?osCsid=lcrlg8v24h9kkbotinepskd1a7. [Accessed 15 March 2014].

[4] MQ-2 Smoke Sensor Available from Internet: http : // www. winsensor. Com /product _pdf /MQ /MQ -2. pdf